SUNWODA ENERGY

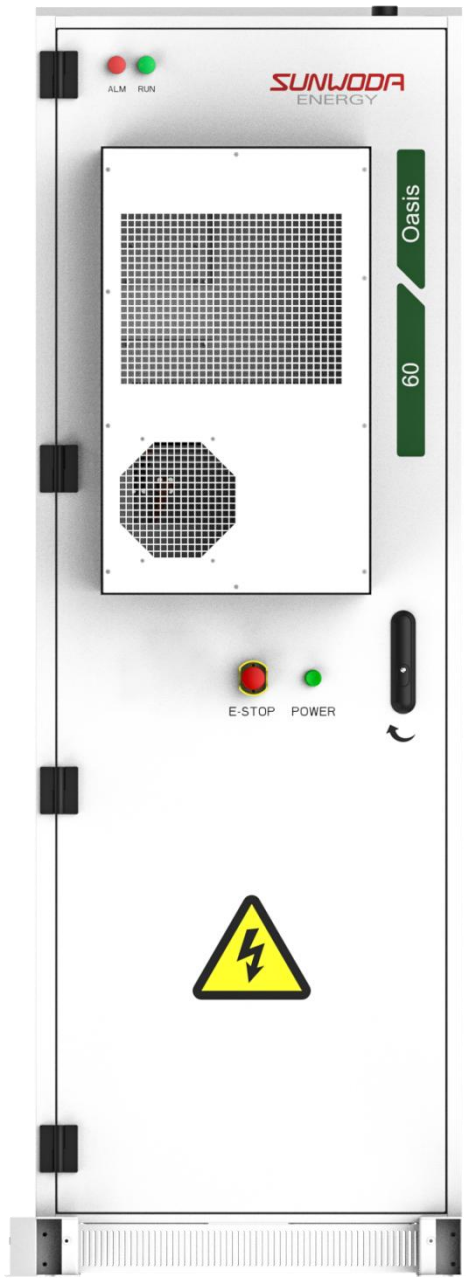

OASIS 50/55/60

50~60kWh Battery Storage System

User Manual

Preface

Thank you sincerely for purchasing and exploring products developed and manufactured by Shenzhen Sunwoda Energy Technology Co., Ltd. (hereinafter referred to as "Sunwoda"). We genuinely hope that our products and this manual will meet your needs. Your valuable feedback is warmly welcomed, and we will continuously improve and enhance our offerings.

Sunwoda owns the copyright of this user manual. All rights not expressly granted herein are reserved. The content is subject to change based on the latest physical product, and revisions may be made without prior notice.

Due to product version upgrades or other reasons, this document may be updated periodically. Unless otherwise agreed, this document serves solely as a product guide. All statements, information, and recommendations provided herein do not constitute any express or implied warranties.

This document and all information contained within are the exclusive property of Sunwoda. No party shall be granted any license to patents, copyrights, trademarks, or other intellectual property rights of the other party through implication, estoppel, or otherwise, based on this document.

For updates or additional information, please get in touch with Sunwoda.

Content

Preface 1
Content 2
I. About This Manual 4
1.1 Attention 4
1.2 Applicable Model 4
1.3 Target Group 5
II. Safety Statement 6
2.1 General Requirement 6
2.2 Installer 6
2.3 Installation Environment 7
2.4 Electrical Connection 8
2.5 Mechanical Installation 9
2.6 Description of the Marking 9
2.7 General Statement 10
III. Product Introduction 13
3.1 System Introduction 13
3.2 Technical Parameter 13
3.3 Single Line Diagram 14
3.4 Machine Structure 15
IV. Transportation, Storage and Unpacking Inspection 20
4.1 Transportation Requirement 20
4.2 Storage Requirement 21
4.3 Unpacking and Delivery Inspection 22
4.3.1 Unpacking 22
4.3.2 Delivery Inspection 25
V. Installation and Wiring 27
5.1 Installation Requirement 27
5.1.1 Installation Environment Requirement 27
5.1.2 Installation Carrier Requirement 29
5.1.3 Installation Angle Requirement 29
5.1.4 Installation Space Requirement 29
5.1.5 Installation Tool Requirement 33
5.2 Mechanical Installation 34
5.2.1 Build the Foundation 34
5.2.2 Foundation Construction Method 35
5.2.3 Handling Equipment 37
5.2.4 Fixed Equipment 42
5.2.5 Inverter Installation Guide 43
5.3 Electrical Wiring 47
5.3.1 Wiring Precautions 47

5.3.2 Wire Harness Specification 48
5.3.3 Ground Line Connection 49
5.3.4 Power Line Connection 52
5.3.5 The Auxiliary Power Supply Line Connection 58
5.3.6 Communication Line Connection 61
5.3.7 Install the Outer Cover Wire Board of the Cabinet 64
5.3.8 Parallel Wiring Connection (If Required) 72
5.3.9 Electrical Inspection 76
5.4 Installation Inspection 78
5.4.1 Electrical Inspection 78
5.4.2 Structural Inspection 79
VI. Equipment Operation 80
6.1 Indicator Light Introduction 80
6.2 Operation Guidance 80
6.2.1 Pre-operation Inspection 80
6.2.2 Power-up Procedure 81
6.2.3 Turn off the Power 82
6.2.4 Emergency Shutdown 82
VII. Maintenance Guidance 83
7.1 Maintenance Precautions 83
7.2 Maintenance Content 83
VIII. Fault Handling 85

I. About This Manual

1.1 Attention

This product is a specialized power distribution equipment. To ensure the correctness and safety of installation, use and other operations, be sure to read this manual thoroughly before starting operations. The installer should be professionally trained with a background in electrical technology and be familiar with local grid codes and related requirements. We will not be held liable for any form of damage or injury resulting from failure to follow the operating instructions highlighted in this manual.

This manual is centered around the OASIS 60 series and details its product features, installation specifications, usage practices, troubleshooting, and routine maintenance. Due to product iteration, the contents of the manual will be constantly updated, the specific product details also please refer to the actual product purchased.

Finally, we hope that this product can fully meet your needs, and we also look forward to your valuable comments on this product. If you have any requests, please feel free to feedback us.

1.2 Applicable Model

This manual applies to the following product models：

OASIS 60 : CIESS 50、CIESS 55、CIESS 60

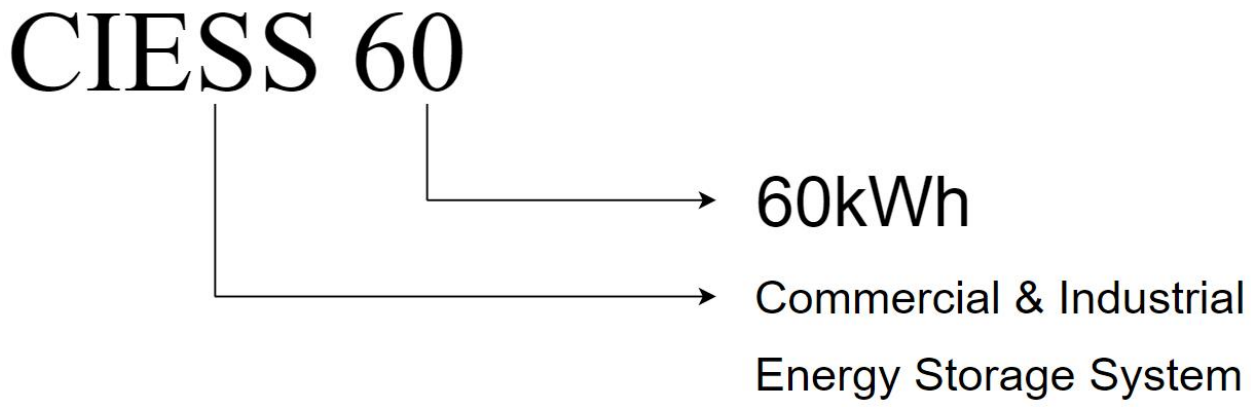

Figure 1.2.1 Description of model

1.3 Target Group

This product should only be operated by a professional who has the following basic competencies:

(1) Professional training on how to deal with the hazards and risks arising during the installation and use of electrical equipment.

(2) Understand the installation and commissioning of conventional electrical equipment and related devices, and understand the specification requirements of local regulations and standards.

(3) Possess professional electrical certifications.

II. Safety Statement

2.1 General Requirement

(1) Before installing the equipment, disconnect the loads and grid circuits and turn the equipment off. Avoid major injuries to personnel or major damage to equipment.

(2) Static electricity may cause irreversible damage to the internal components of the equipment. When using the product, be sure to comply with the electrostatic protection specifications.

(3) This product cannot be used to connect life support equipment and medical equipment directly. To ensure your safety and compliance, please consult the supplier in advance of purchase.

(4) Before the product is turned on, please check the equipment and do not leave installation tools or other unnecessary items inside the cabinet to avoid damage to the equipment after powering on.

(5) Maintenance equipment, be sure to ensure that the equipment has been safely disconnected from the power supply, and wait for the machine to have all the electrically charged devices discharged (more than 10min), so as not to cause significant damage.

2.2 Installer

(1) All operations of the equipment must be carried out by professional, qualified technicians who have undergone special training and have professional electrical certificates, and the technicians should be familiar with the relevant standards and safety codes of the project location.

(2) The operator should read this document before installation and understand the structure, working principle and precautions of the product in detail before starting operation.

(3) In order to ensure personal safety, please wear personal protective equipment and prepare the insulating tools that need to be used before starting to operate the equipment. Personal protective equipment includes safety clothing, safety helmets, safety shoes, insulated gloves, goggles, etc., and insulated tools can be prepared with an insulating layer including the handle of the tool.

(4) In order to ensure the safety of the equipment, contact with electronic devices need to wear

electrostatic bracelets, electrostatic gloves, and anti-static clothing when operating.

2.3 Installation Environment

(1) In order to avoid the disturbance of the noise of the equipment operation, it is necessary to install the equipment in an area far away from the residents' life, not less than 50m.

(2) In order to ensure heat dissipation, the equipment should be in a well-ventilated space（not less than $50m^3$）, to avoid the surrounding airflow.

(3) In order to facilitate maintenance, the equipment should leave enough space around, see Chapter 5.1 for details.

(4) To ensure normal operation, the ambient temperature of the equipment should be between -20~55℃.

(5) In order to guarantee the service life, please install the equipment in a dry and clean environment, avoid the air containing a lot of water vapor and dust（environmental humidity requirements: 10%~95%, no condensation）, avoid direct sunlight, snow and rain and other extreme environments.

(6) In order to protect the use, as far as possible to avoid equipment in the smoke, dust and other particles in the environment (air pollution index < 300), to ensure that the environment around the product is clean and tidy.

(7) To ensure use, it is strictly prohibited to operate the equipment in harsh or humid environments such as smoke, rain, snow, etc., and surrounding debris should be promptly disposed of before operation.

(8) In order to avoid equipment failure, the equipment should be installed in an area away from the liquid（not less than 50m）. It is prohibited to install it below the water pipes, air outlets and other locations that are prone to condensation; it is prohibited to install it below the air conditioning outlets, vents, computer room outlet windows and other locations that are prone to water leakage.

(9) To avoid major damage, do not place flammable or explosive items around the equipment. The

equipment should be kept away from any heat and fire sources.

(10) When the equipment is in operation, do not cover the air vents, heat dissipation system or use other items to cover them.

2.4 Electrical Connection

(1) The installation of the product should meet the requirements of local power grid regulations and safety codes.

(2) Product operation involves the risk of high voltage electric shock, only electricians with specialized skills should operate the equipment.

(3) To avoid high voltage breakdown, do not touch the conductors connected to the grid circuit.

(4) Wear a static electricity bracelet when operating the electronic components inside the equipment.

(5) It is prohibited to damage the grounding conductor and to operate the equipment without the grounding conductor installed.

(6) When installing, operating, or maintaining the equipment, it is prohibited to wear watches, bracelets, bangles, rings, necklaces, and other easily conductive objects to avoid electric shock burns.

(7) The voltage at the point of contact should be measured before contacting any conductor surface or terminal to ensure that there is no danger of electric shock.

(8) Solvents such as water, alcohol or oil are prohibited for cleaning electrical parts inside and outside the cabinet.

(9) In the process of equipment operation, such as the discovery of faults that may lead to personal injury or equipment damage, should immediately terminate the operation, report to the person in charge, and take effective protection measures.

(10) Do not power up the equipment before installation is completed or confirmed by a professional.

2.5 Mechanical Installation

(1) Considering the weight of the equipment, the person who carries out the lifting or forklift loading operation needs to carry out the relevant training and be qualified before taking up the job.

(2) When working at height, personnel must wear a safety helmet and a safety belt (or waist rope) securely fastened to a solid and stable structural component. It is strictly prohibited to attach or move while hanging onto unstable objects or sharp metal edges, in order to prevent the hook from slipping and causing a fall accident.

(3) The lifting tools must be inspected, the tools need to be prepared and qualified by professional organizations, prohibit the use of scarred, unqualified or beyond the inspection of the validity of the tools to ensure that the tools are solid, and can bear the weight of the equipment.

(4) Before installing the equipment, first of all, make sure that other products have been fixed well, to avoid other products due to the center of gravity is not stable, or tilting collapse, resulting in the installation of personnel were smashed, equipment broken and other problems.

(5) Drilling holes in the equipment is strictly prohibited. Drilling holes will damage the sealing, electromagnetic shielding performance, internal devices and cables of the equipment, and metal shavings from drilling holes into the equipment will lead to a short circuit of the circuit board.

(6) When installing the equipment, please make sure that the bottom carrier of the product is strong and reliable and can carry the weight of the cabinet to avoid damage to the equipment.

2.6 Description of the Marking

For personal and equipment safety, follow the safety precautions marked on the equipment when installing, operating, and maintaining the equipment. If the relevant markings become unclear due to long-term use, replace them promptly. The categories of markings and symbols on the product are as follows.

Identifier

ICON	Description
	Front side up, it is forbidden to place the electrical cabinet horizontally, tilted or upside down.
	Carefully and gently put, to avoid the transportation environment is too intense collision friction damage to the equipment.
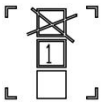	Maximum number of stacking layers: 1 layer.
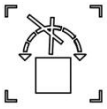	No tumbling.
	Stay safe.
	There is an electrical hazard. Equipment should only be operated and maintained by specialized personnel.
	It is necessary to wait 10min after power failure to ensure that the machine is fully discharged!
	Hazardous hot surface symbol. Watch out for high temperatures and burns.
	The equipment needs to be recycled at the end of its life.

2.7 General Statement

Before transporting, storing, installing, operating, using, or maintaining the equipment, please read this manual carefully, follow its instructions strictly, and comply with all safety notices on the equipment and in this manual. In this manual, “equipment” refers to the products, software, components, spare parts, and/or services described here in; “the Company” refers to the manufacturer (producer), seller, and/or service provider of the equipment; and “you” refers to any person or entity responsible for transporting, storing, installing, operating, using, or maintaining the equipment.

The terms “Danger”, “Warning”, “Caution”, and “Notice” in this manual do not represent all safety requirements, you must also comply with applicable international, national, or regional standards, as

well as industry best practices. The Company assumes no responsibility for any consequences resulting from failure to comply with safety requirements or from violations of design, production, or equipment use standards.

The equipment must be used in an environment that meets the design specifications. Failure to do so may result in equipment malfunction, abnormal operation, or component damage, which are not covered under the equipment's quality warranty. The Company is not liable for any personal injury, property damage, or other losses that may result from improper use.

This equipment is not designed to be used as a life-support system, medical equipment, mobile vehicle, ship, aircraft, emergency rescue, drilling, mining, or any other operation where product failure could result in personal injury, loss of life, or serious property damage, whether as a primary or backup power source. The Company assumes no liability for any consequences arising from such use of this equipment. Furthermore, The Company reserves the right to refuse service to any equipment used for these purposes and shall not be liable for any consequences resulting from providing or refusing service under such circumstances.

All operations, including transportation, storage, installation, operation, use, and maintenance, must comply with applicable laws, regulations, standards, and normative requirements.

Reverse engineering, decompiling, disassembling, modifying, implanting, or creating derivative works from the equipment software is strictly prohibited. You may not study the internal logic, obtain the source code, infringe on intellectual property rights, or disclose any software performance test results in any manner.

The Company shall not be held responsible for any damage or consequences resulting from the following:

- Equipment damage caused by earthquakes, floods, volcanic eruptions, landslides, lightning, fire, war, armed conflicts, typhoons, hurricanes, tornadoes, extreme weather, or other force majeure events.
- Operation outside the conditions specified in this manual.
- Installation or operating environments that do not comply with applicable international, national, or regional standards.
- Installation or operation by unqualified personnel.

- Failure to follow product instructions, operational guidelines, or safety warnings.
- Unauthorized disassembly, modification of the product, or alteration of software code.
- Damage caused during transportation by you or a third party commissioned by you.
- Damage resulting from storage conditions that do not meet the product documentation requirements.
- Use of materials or tools that do not comply with local laws, regulations, or relevant standards.
- Damage caused by negligence, intentional acts, gross misconduct, improper operation, or reasons not attributable to the Company by you or a third party.

Only authorized personnel are permitted access to the energy storage cabinet site. The site entrance and the cabinet doors may only be opened by authorized personnel (such as installation or maintenance engineers). Please entrust the keys to designated operations and maintenance personnel for safekeeping.

Please dispose of used batteries promptly in accordance with local regulations.

III. Product Introduction

3.1 System Introduction

OASIS 60 industrial and commercial series products are high-security, high-reliability, standardized series products developed for industrial and commercial application scenarios. It adopts modular system configuration to flexibly match all kinds of industrial and commercial scenarios, and with a variety of energy storage inverters, it can support on-grid, off-grid, and on and off-grid scenarios; and it supports parallel expansion, which is convenient for system expansion, and it can realize the shift of peaks and valleys and the staggered peaks of electricity consumption, and alleviate the pressure on the power grid.

Products include battery PACK, control box, battery management system, etc.

3.2 Technical Parameter

Product Series	OASIS 60		
Product Model	CIESS 50	CIESS 55	CIESS 60
Battery Side Parameter			
Cell Type	LFP		
Cell Specification	3.2V 100Ah		
PACK Capacity	5kWh		
PACK Quantity	10	11	12
Nominal Capacity	50kWh	55kWh	60kWh
Nominal Voltage	512V	563.2V	614.4V
System Parameter			
Communication Interface	RS485、CAN、WiFi、ETH		
Display	Cloud Platform、APP		
Max. Continuous Charge Current	100A		
Max. Continuous Discharge Current	100A		
Expansion	Supports up to 6 battery cabinets in parallel		
Protection Rating	IP55		
Cooling Method	Air-conditioning Cooling		
Installation Type	Outdoor		
Ambient Temperature	-20~55℃（＞45℃ derating）		
Recommended Storage Temperature	20～30℃		
Humidity	10%～95% （non-condensing）		
Noise	＜75dB		

Altitude	2000m		
Cycle life	6000times (25℃, 0.5C/0.5C, 90%DOD, 60%EOL)*		
Size (W*D*H)	731*767*2116mm		
Weight	720kg	765kg	807kg

*For warranty instructions, please refer to the warranty terms.

Note: The air conditioner has a cooling power of 850W and a heating power of 1050W.

3.3 Single Line Diagram

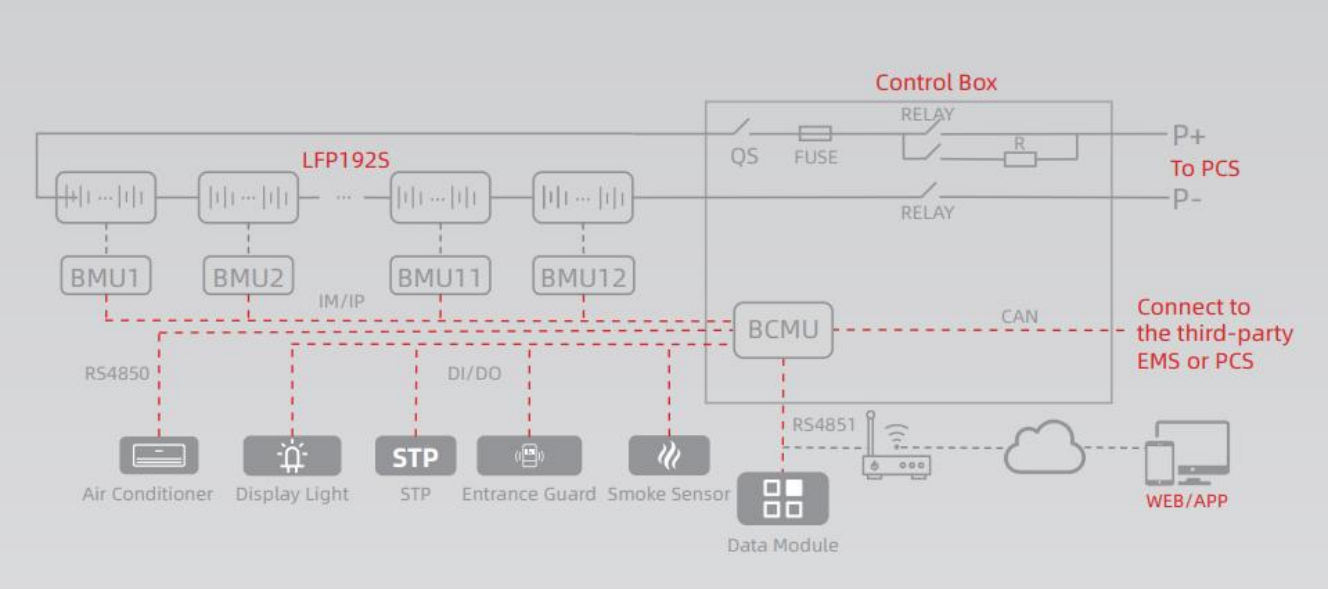

3.4 Machine Structure

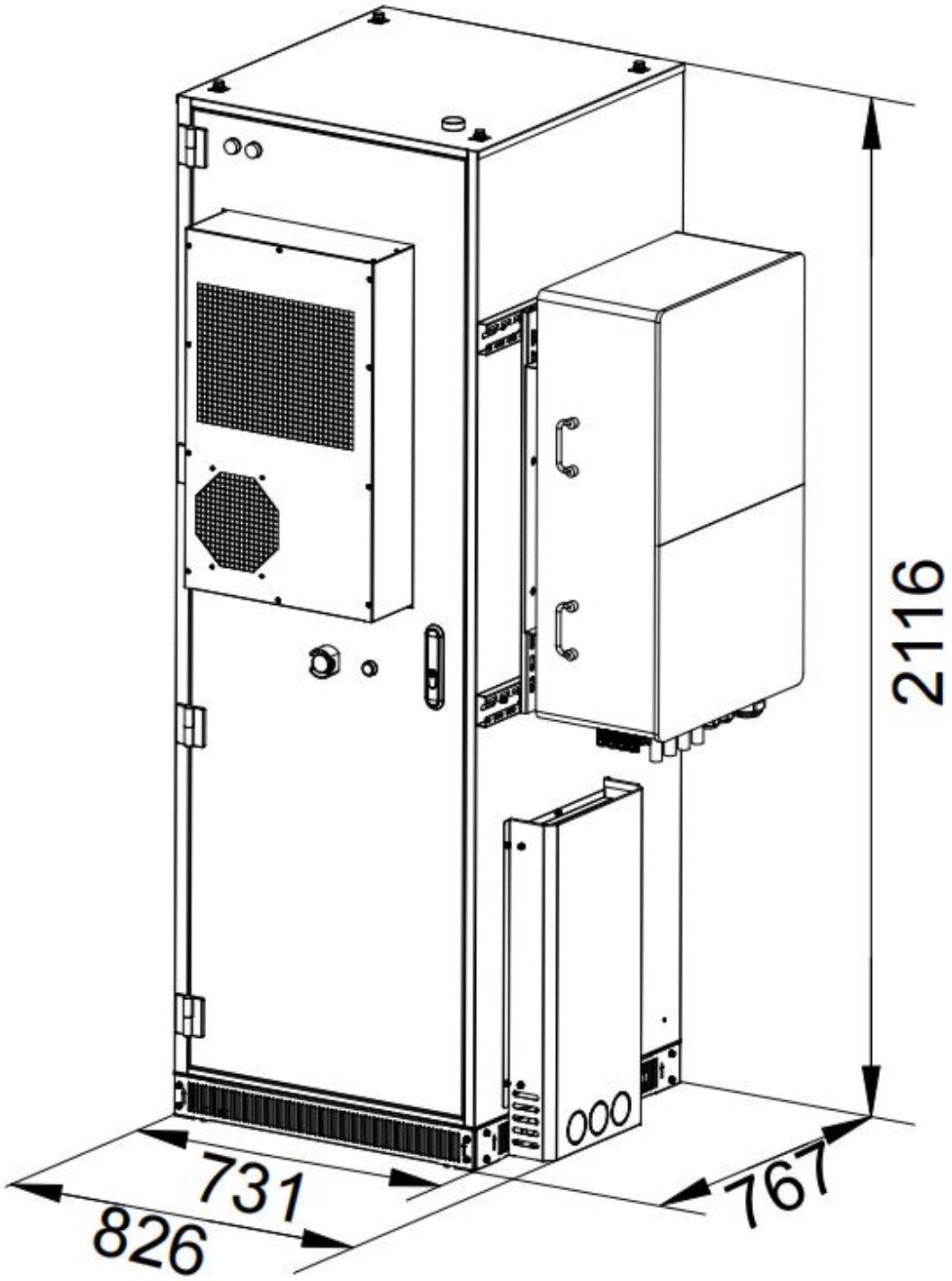

3.4.1 Dimension Drawing

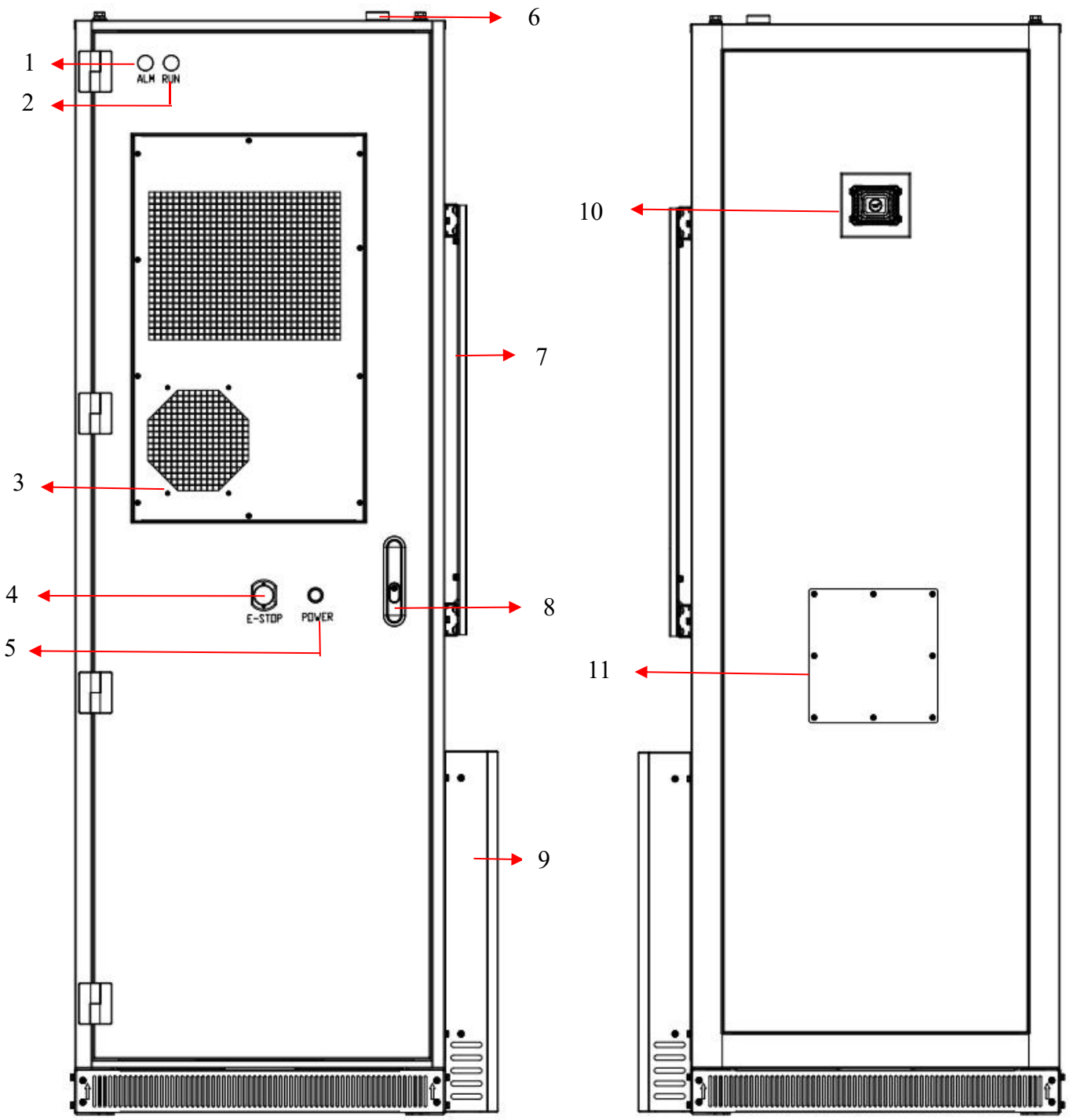

Figure 3.4.2 Front View and Rear View

NO.	Name	NO.	Name
1	Fault Indicator Light	7	Inverter Support Frame（The load-bearing capacity is ≤110kg）
2	Run Indicator Light	8	Door Lock
3	Air Conditioner	9	Cover Plate
4	Emergency Stop Switch	10	Explosion-proof Valve
5	Power on/off Button	11	Water Fire Protection Interface (Reserved)
6	Antenna		

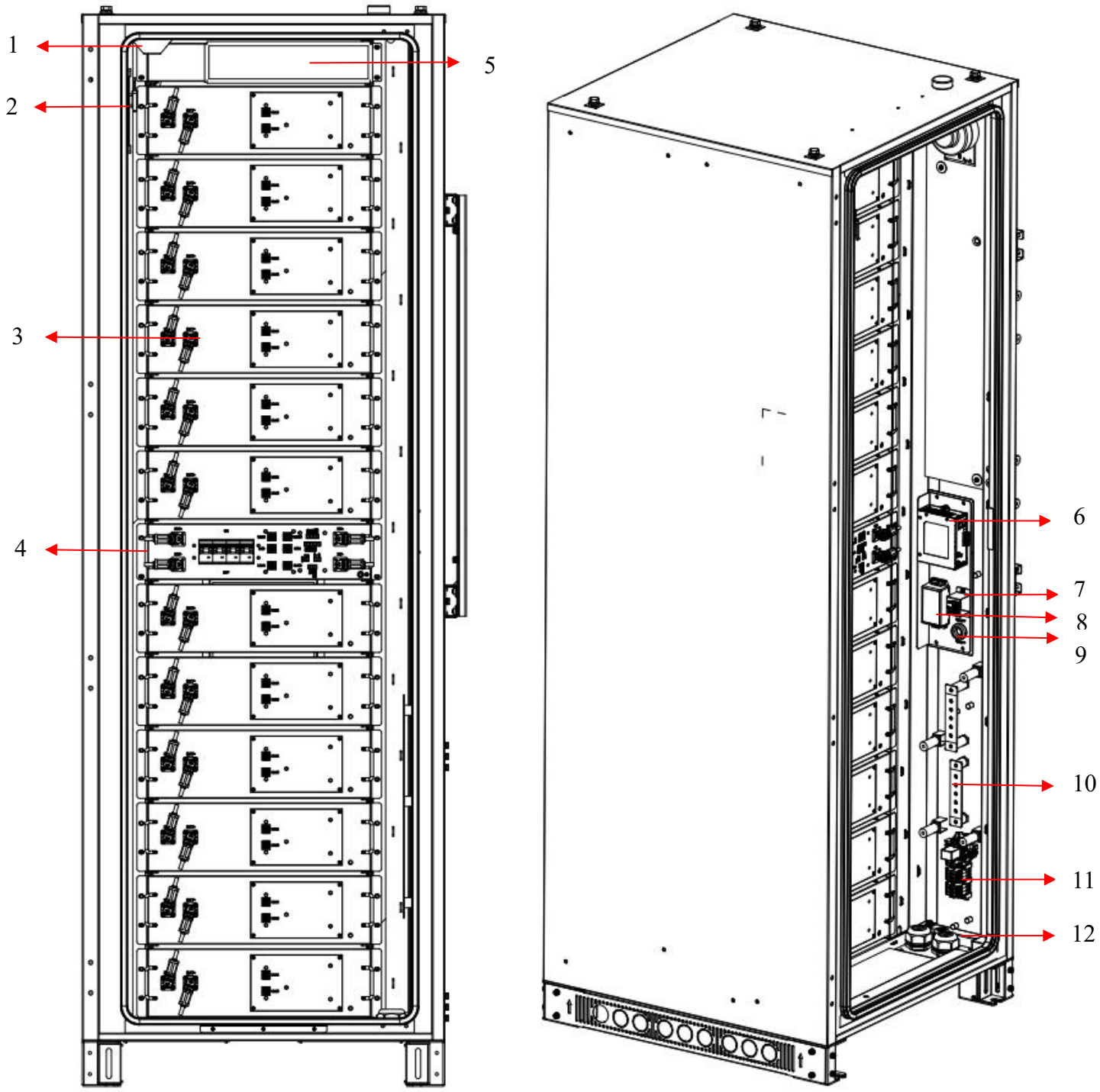

Figure 3.4.3 Inner View

NO.	Name	NO.	Name
1	Smoke Detector	7*	AC/DC Power Supply Module Power Control Switch
2	Aerosol Fire Suppression	8	AC/DC Power Supply Module
3	Battery PACK	9	AC/DC Power Supply Module Power Cable Magnetic Ring
4	Control Box	10	Wiring Copper Busbar
5	Ventilation Passage	11	Terminal Block
6	Data Module	12	Inlet/Outlet Hole

* The power control switch on the AC/DC power supply module is set to the “O” (off) position by default. If an auxiliary power source for the air conditioning system is connected (see Section 5.3.5), manually turn this switch on. The AC/DC power supply module will then provide 24V power to the battery auxiliary power system, and the 24V battery auxiliary power system will prioritize drawing power from the AC/DC module.

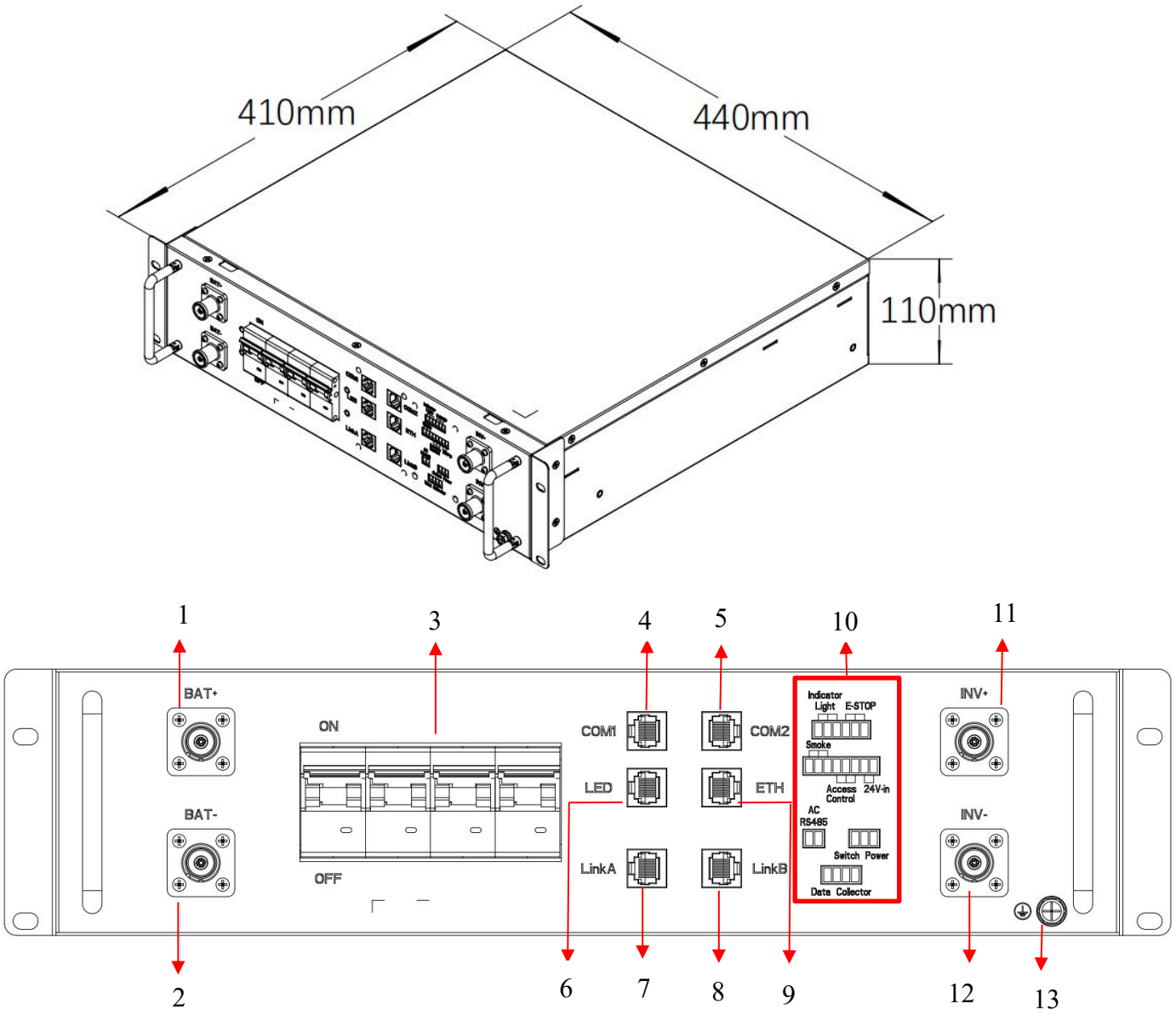

Figure 3.4.4 Control Box

NO.	Name	NO.	Name
1	BAT+ Positive Input Connector	8	Link B Connector
2	BAT- Negative Input Connector	9	ETH Connector
3	Air Switch	10	Function Connector
4	COM1 Connector	11	INV+ Positive Output Connector

5	COM2 Connector	12	INV- Negative Output Connector
6	LED Connector	13	Ground Wire Connection Point
7	Link A Connector		

Note: The customer must wire the control box's COM1 and COM2 ports according to actual requirements (see Section 5.3.6 for details); no external wiring is required for the remaining ports.

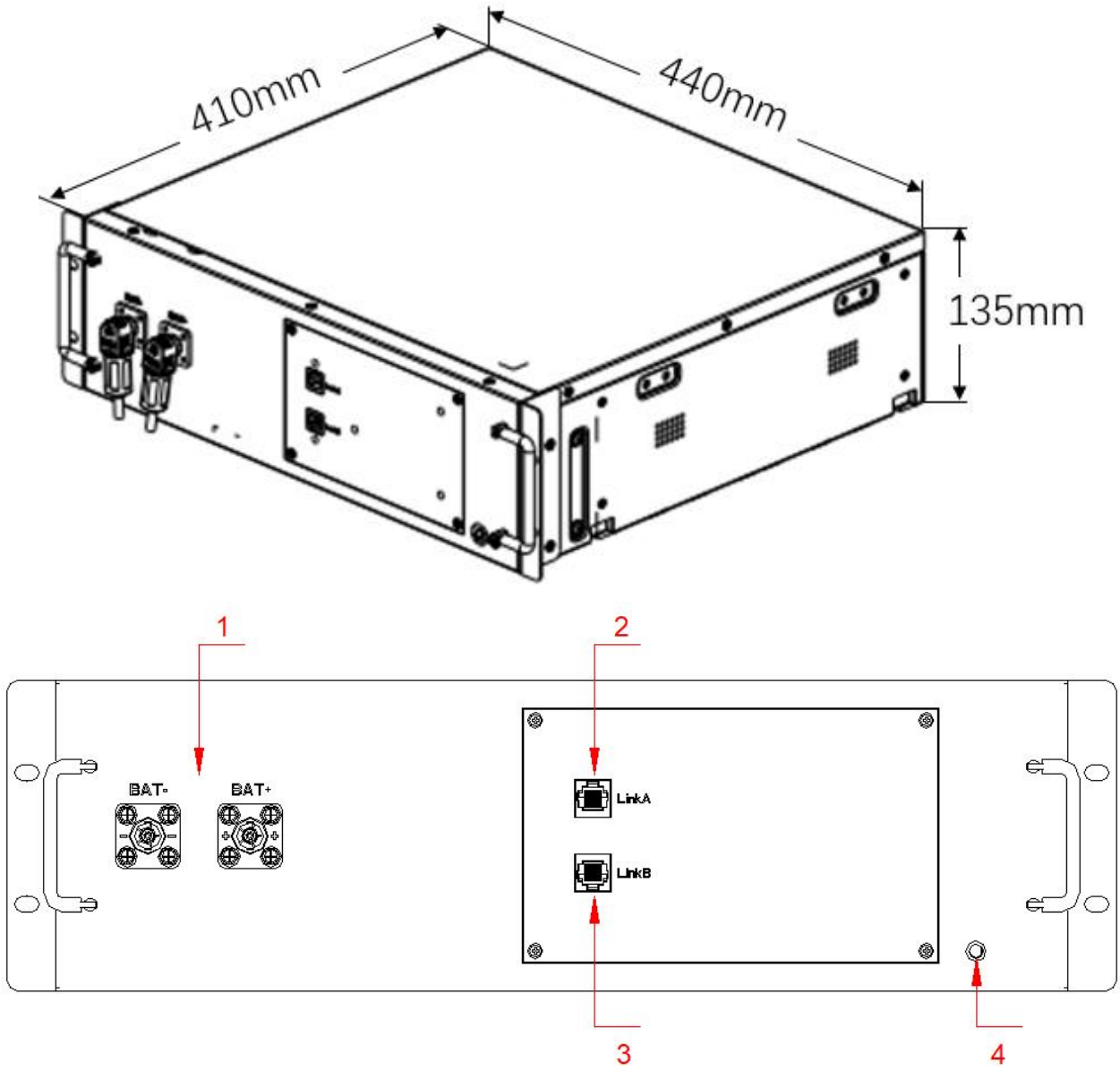

Figure 3.4.5 Battery PACK

NO.	Name	NO.	Name
1	Bat+/- Connector	3	Link B Connector
2	Link A Connector	4	Ground Point

Note: Grounding of the wiring harness is not required here. The grounding of the PACK has been completed by using a bolt fastening structure for spray protection.

IV. Transportation, Storage and Unpacking Inspection

4.1 Transportation Requirement

Improper transportation may cause injuries or equipment damage, when transporting, please be sure to follow the following transportation requirements:

(1) Please check whether the package is intact before transportation. If you find any signs of damage, do not open the package and contact your supplier.

(2) Only professionally trained and instructed personnel should carry out transportation operations on public roads.

(3) Whenever possible, transport the product in its packaging and follow the safety regulations indicated on the packaging.

(4) Please use appropriate fixing devices, such as ropes, support frames, etc., during transportation to ensure that the equipment will not be shifted due to shaking or vibration during transportation.

(5) Keep the equipment upright during transportation. Do not allow the equipment to be placed horizontally or reverse upside down, so as to avoid the internal modules of the equipment sliding and causing damage to the equipment.

(6) The inclination Angle of the equipment during transportation should be less than 5°.

(7) The equipment should be transported as a complete unit. Any detachment of the system without our permission and consequent damage to the equipment is not covered by the warranty.

(8) Avoid severe vibration, shock or crushing during transportation. Sudden lowering or lifting is also not allowed. Please minimize bumps and tilts during transportation.

(9) Please refer to the front-facing sign on the cabinet for the direction of transportation of the equipment, and avoid inverting, tilting, dropping, mechanical impact, rain, snow and falling into the water.

(10) Comply with the international road transportation rules and meet the regulatory requirements of the transportation regulatory authorities of the country of origin, route and destination.

(11) The transportation should choose sea transportation or road with good condition, and do not support railroad and air transportation.

(12) The loading, unloading and handling process during transportation must be carried out by professional personnel.

(13) Please pay attention to the loading and unloading and handling process during transportation, so as to avoid damage to the equipment or personnel.

(14) Be sure to wear appropriate personal protective equipment, such as helmets and non-slip shoes, during loading, unloading and handling during transportation.

(15) During transportation, make sure the foundation is protected from moisture if necessary.

(16) The loading, unloading, and handling process during transportation can be carried out by forklift, crane, or wheelbarrow, etc., and a trial loading and lifting can be carried out to ensure the load-bearing capacity of the loading equipment when forklifting or lifting.

(17) Please arrange auxiliary personnel during the handling process to avoid the situation that the equipment size is too big to block the driver's sight.

(18) Please pay attention to the center of gravity of the equipment and keep the equipment balanced.

4.2 Storage Requirement

If the product is not installed on site immediately after arrival, the product should be stored with the outer packaging and the following matters should be followed:

⚠ Warning
(1) Store the battery indoors. No direct sunlight or rain, no extreme cold or heat, dry and well ventilated, away from heat and fire sources.
(2) If the battery is bulging, deformed, broken or leaking, it shall be scrapped without regard to the storage time.
(3) When storing the battery, it should be placed correctly according to the identification of the packing box, and it is strictly prohibited to place it upside down, sideways, or at an angle, and when stacking it, it should conform to the yardage requirements on the outer packaging.

(4) The site must be equipped with fire-fighting facilities that meet the requirements, such as firefighting sand and fire extinguishers.
⚠ **Warning**
(1) Batteries are recommended to be used in a timely manner. For batteries that have been stored for a long period of time, please carry out regular replenishment of electricity, otherwise the batteries may be damaged.
(2) The ambient air must not contain corrosive or flammable gases, the surrounding environment is clean, there is no large amount of infrared and other radiation, no organic solvents or corrosive gases, and there is no metallic conductive dust.
⚠ **Notice**
(1) During storage, it is necessary to keep relevant proof of compliance with product storage requirements, such as temperature and humidity log data, photos of the storage environment and inspection reports.
(2) Store in a clean and dry place and protect from dust and moisture. Prohibit erosion by rain or ground water.
(3) Storage environment requirements: Recommended storage temperature: 20℃～30℃. Relative humidity: 10% RH～80% RH. Dry, ventilated and clean. Avoid contact with corrosive organic solvents, gases and other substances. Avoid direct sunlight. The distance from the heat source should not be less than two meters.
(4) From the date of shipment from the manufacturer, it is recommended to perform a charging maintenance on the battery every 6 months. At the latest, charging maintenance should be performed no later than 12 months, and the desiccant inside should be replaced in a timely manner.

4.3 Unpacking and Delivery Inspection

4.3.1 Unpacking

Once the product has been transported to the vicinity of the installation site, unpack it and check that the delivery items are complete.

(1) Inspection

First observe the anti-tipping labels on the wooden crate packaging. One label is affixed to the front and one to the left side. If the silver-white mark on the label turns red, it indicates tipping has

occurred. If it remains silver-white, the product is intact and can be received and unpacked normally.

Tilt Inspection: Critical Tilt Value for Monitoring Label.

The critical tilt value is 80°±5%. When the tilt is below this threshold, repeated tilting will not trigger a reaction. When the tilt exceeds the critical value, the tilt-sensitive area on the label will change from silver-white to red and cannot revert.

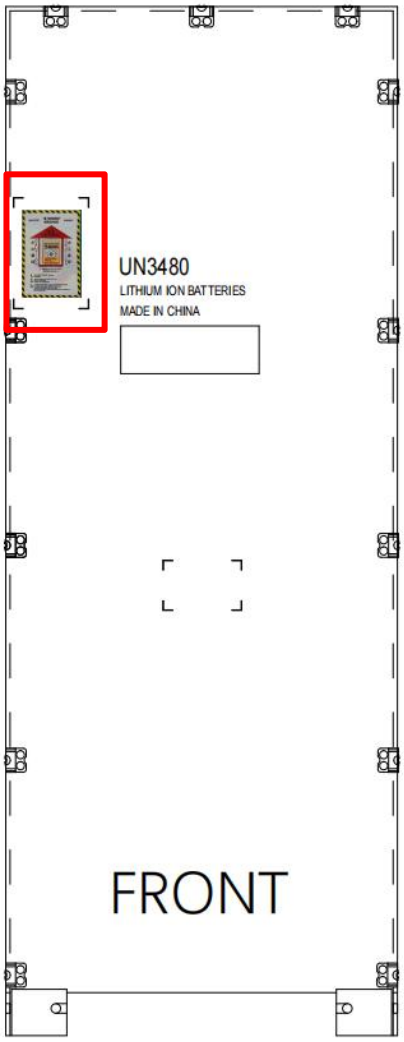

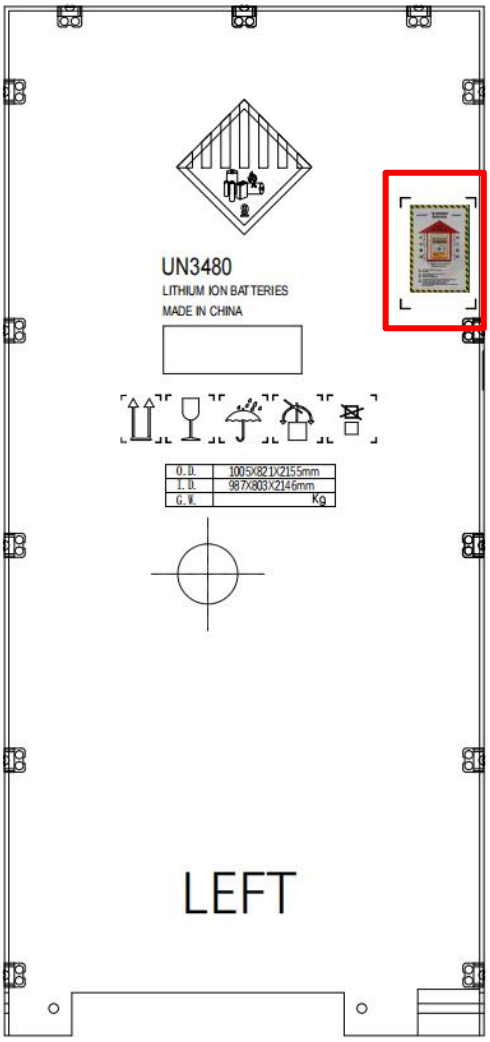



Figure 4.3.1.1 Tilt Display Label

If the tilt indicator label appears red, it indicates the package was tilted during transit. Customers should note this on the delivery receipt and inspect for damage. If damage is found, leave the goods in their original packaging and condition, and request the carrier to conduct an immediate inspection within three days of receipt.

(2) Unpacking

Step1. Remove the bolts on the four cabinet feet at the bottom of the packing crate.

Step2. Remove the top and side panels of the crate.

Step3. Remove the external packing materials from the product, Remove the screws securing the leveling feet at the bottom of the cabinet. Remove the leveling feet from the bottom of the cabinet..

Step4. Check whether the delivered items are complete.

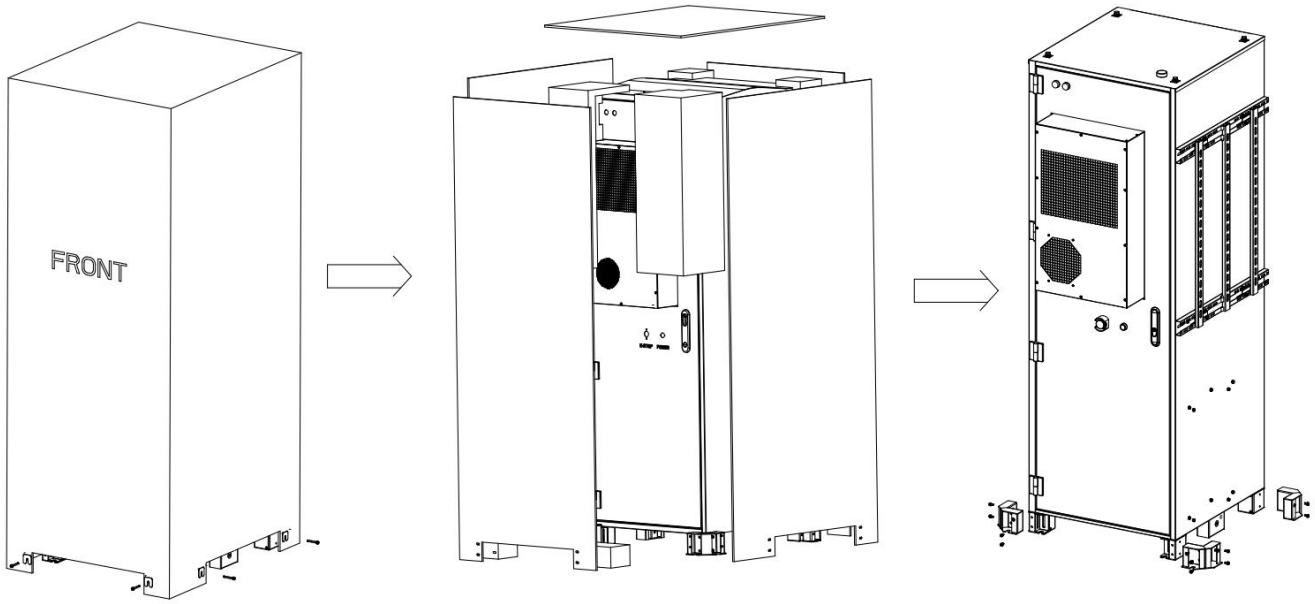

4.3.2 Delivery Inspection

Please check against the packing list to see if the items received are complete. The actual pictures of the items are as follows (please refer to the actual shipment):

NO.	Name	Description	Quantity	Reference Picture	Note
1	Certificate of Conformity	/	1	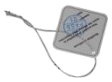	
2	Baffle Plate	Front/back plate: baffle plate 1，2pcs, 718mm, SGCC; Side plate：baffle plate 2，2pcs，749mm, SGCC	4		Front/back plate
					Side plate
3	Wire Cover Plate	385*699*103mm	1		It contains two wire binding boards

4	Cable Tie	White	50		
5	Expansion Bolt	M12*80	4		To fix the cabinet
6	Bolt Assembly	M8*20	4		
		M10*25	4		
		M6*14	30		
7	Bolt	/	4		For Lifting
8	Tubular Terminal	/	8		
9	Fork-shaped Terminal	/	4		
10	Ground Wire	8AWG，UL1015，1.5m	1		
11	Communication Line	Cat5e, 4.2m	1		To PCS/Parallel Communication Cable
12	Communication Line	Cat5e, 2m	1		LAN Communication Cable
13	Power Cable	3AWG to 6AWG split power line, UL10269, 2.5m	1		To PCS/parallel positive power cable
14	Power Cable	3AWG to 6AWG split power line, UL10269, 2.5m	1		To PCS/parallel negative power cable

V. Installation and Wiring

5.1 Installation Requirement

5.1.1 Installation Environment Requirement

(1) It must not be installed in flammable, explosive, or corrosive environments.

(2) The installation location should avoid areas where children are active, to prevent accidental contact or injury.

(3) The installation space must meet the equipment's ventilation, heat dissipation, and operational space requirements.

(4) The installation height should allow for easy maintenance, ensuring that labels and indicator lights are clearly visible and terminals are easily accessible.

(5) Suitable for operation at altitudes below 2000 m, with a temperature range of -20°C to 55°C (derating above 45°C).

(6) The installation foundation must be level, solid, flame-retardant, and capable of supporting the equipment's full-load weight and dynamic stress.

(7) A maintenance clearance of no less than 0.5 m must be reserved around the energy storage system, and a vertical clearance of no less than 0.5 m above it for ventilation and operation.

(8) The equipment must be properly grounded, with grounding resistance not exceeding 0.1Ω, and must comply with local electrical safety regulations.

(9) Firefighting equipment meeting fire protection requirements (such as aerosol, Perfluorohexanone, or ammonium phosphate dry powder extinguishers) must be provided at the installation site and placed in easily accessible locations.

(10) It is prohibited to install the energy storage system in low-lying areas prone to flooding, water accumulation, or poor drainage. The system should be installed away from liquids and must not be

placed under water pipes, air outlets, or other locations prone to condensation or leakage, to prevent liquid ingress that could cause failure or short circuits.

(11) Site selection and installation must comply with local energy storage standards and fire regulations. The site should have convenient transportation access, with surrounding roads accessible to fire trucks. Locations must avoid, including but not limited to, historical and cultural heritage protection areas, densely populated places, high-rise buildings, underground buildings, and areas with existing underground facilities.

(12) There must be no vegetation or flammable materials within 3 meters of the installation site and the surrounding area.

(13) The distance between the energy storage system and flammable/explosive hazard sources (such as fuel dispensers, oil tanks, gas tanks, hydrogen refueling equipment) must be ≥10 meters.

(14) The distance between the energy storage system and key locations such as main entrances/exits of densely populated places (schools, hospitals, hotels, shopping centers, etc.) must be ≥3 meters.

(15) The system must not be installed in locations subject to vibration, shock, or frequent movement (e.g., directly next to large stamping equipment or near railway tracks without isolation).

(16) The installation location should avoid enclosed or semi-enclosed spaces where flammable gases may accumulate. If unavoidable, gas detection and linked ventilation systems must be installed.

(17) The system must not be installed in areas with severe salt spray corrosion (such as unprotected coastal exposure) or heavy dust that may lead to conductive dust accumulation, unless additional protective measures are taken.

(18) The equipment must not be placed near heat or fire sources such as open flames, hot air outlets, heaters, or other heat-generating equipment, as overheating may cause damage or fire.

5.1.2 Installation Carrier Requirement

(1) Do not mount the equipment to flammable materials. The mounting carrier must be fire-resistant.

(2) The mounting carrier must be reliable and sufficient to carry the weight of the equipment(≥2t and ＞1500kg/m²).

(3) There may be slight vibration during the operation of the equipment. Do not install the equipment on a carrier with poor sound insulation, so as to prevent the noise of the equipment operation from affecting the people in the surrounding area.

5.1.3 Installation Angle Requirement

The equipment should be installed horizontally and vertically, not tilted or inverted.

5.1.4 Installation Space Requirement

When installing the equipment, please observe the following peripheral space reservation requirements while taking into account the footprint of the equipment:

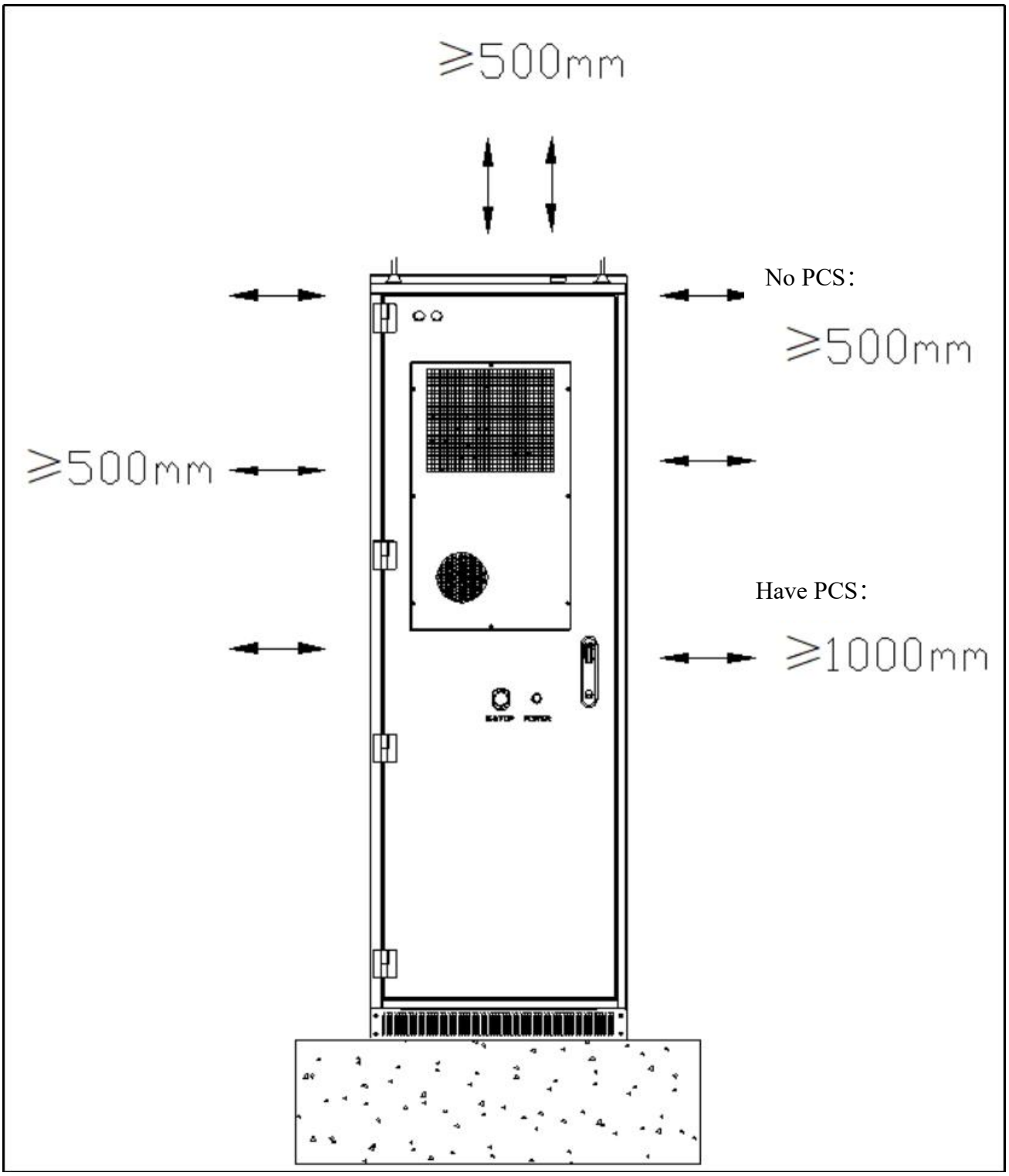
≥500mm
No PCS：
≥500mm
≥500mm
Have PCS：
≥1000mm

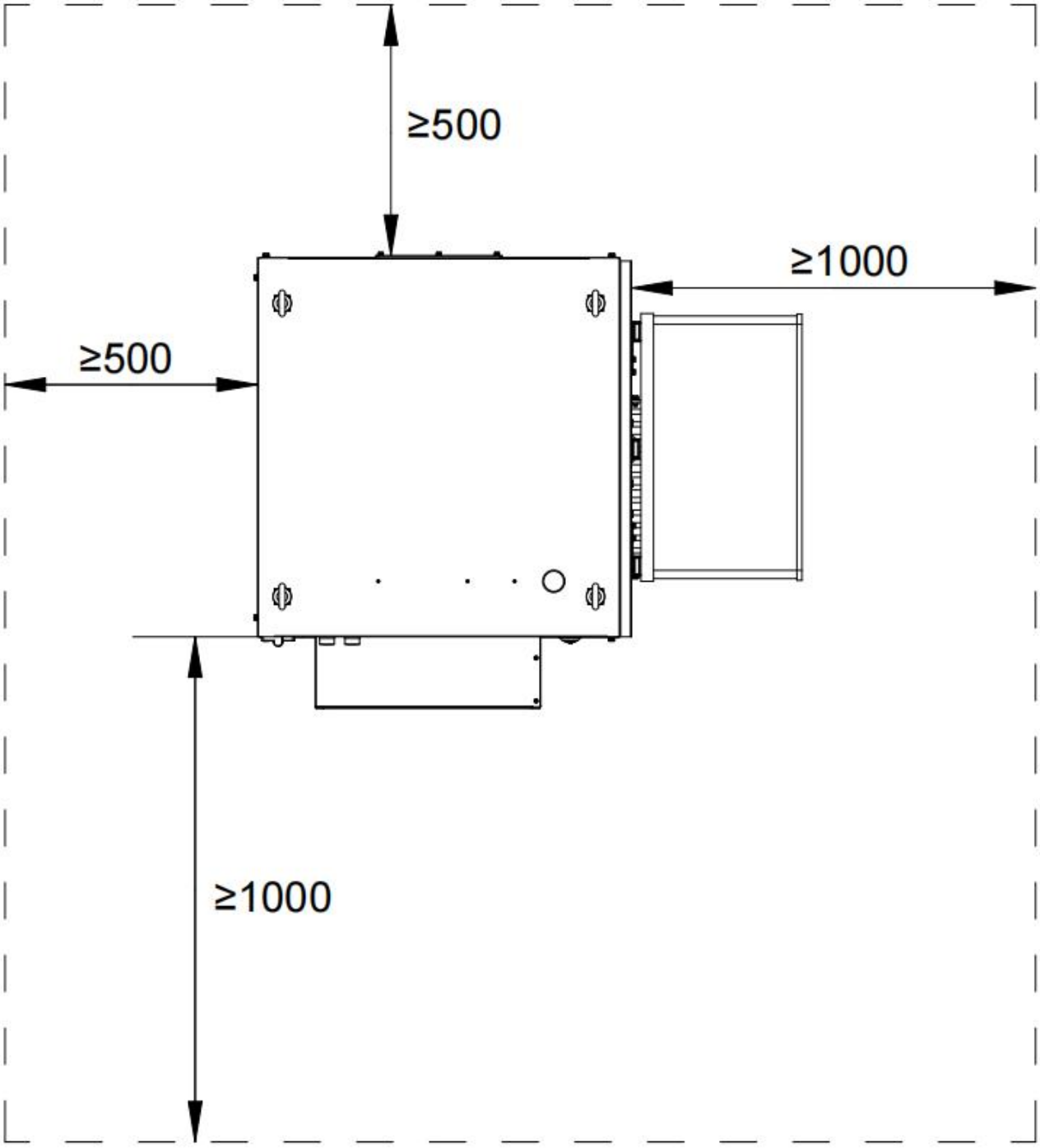
≥500
≥1000
≥500
≥1000

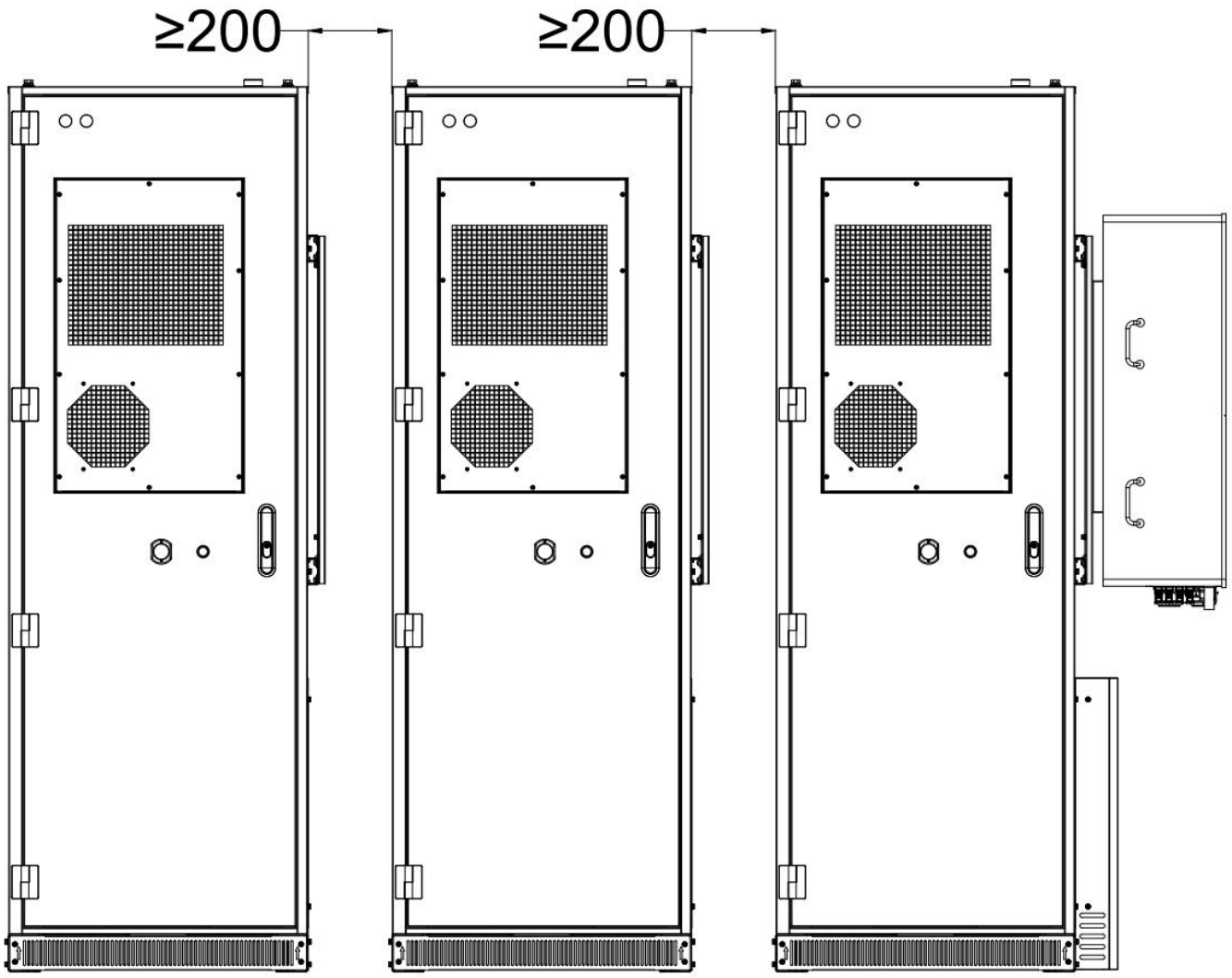
≥200
≥200

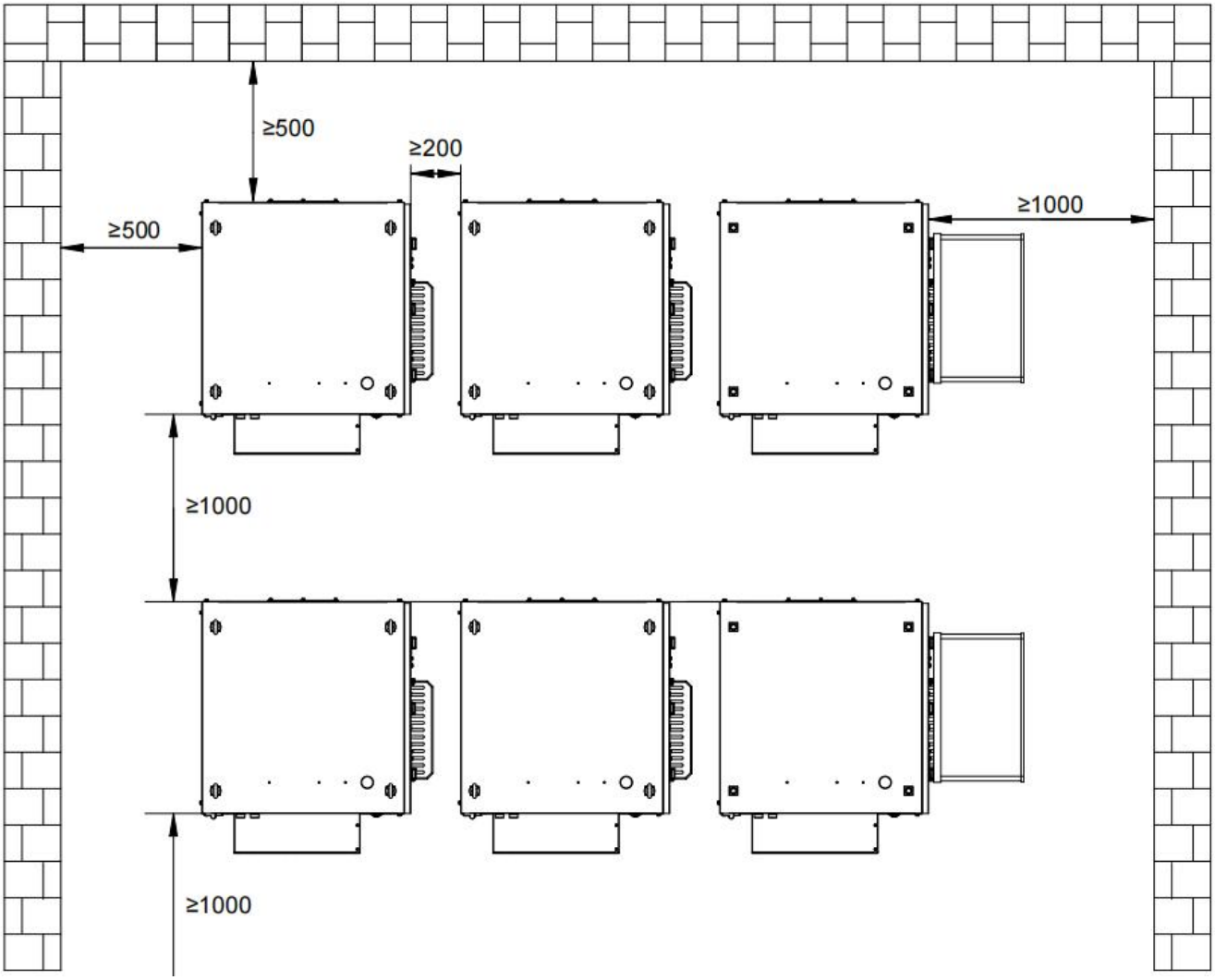

5.1.5 Installation Tool Requirement

（1）Protective Tool

				
Insulated Gloves	Work Protection Gloves	Safety Helmets	Insulated Shoes	Reflective Safety Jacket

Note: The above is for reference only and is inclusive and not limited to.

（2）Mounting Tool

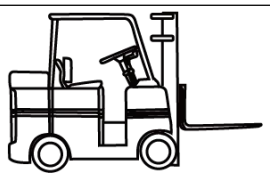	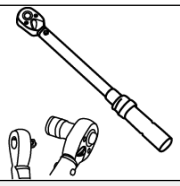	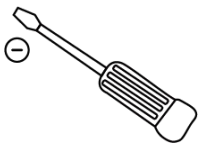	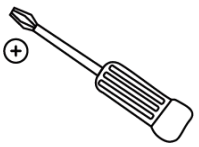
Forklift(≥2t)	Insulated Torque Wrench（10~50N•m）	Flathaed Screwdriver	Phillips Screwdriver
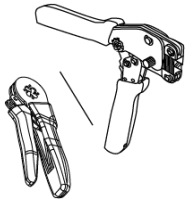	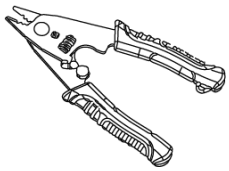	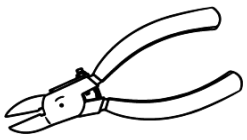	
Crimping Pliers（7”, hexagonal, 0.25~6mm^2）	Wire Stripper（7”）	Wire Cutter（5”）	Rubber Hammer（50mm）
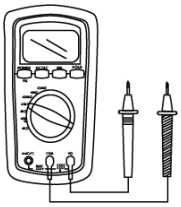	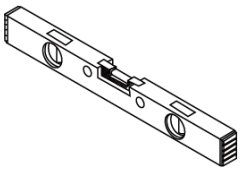	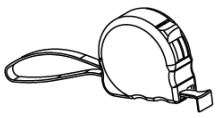	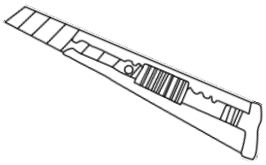
Multimeter（15B MAX-01，DC1000V）	Level Ruler（500mm）	Steel Tape Measure（5m）	Art Knife
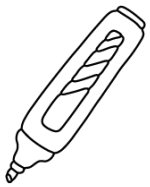	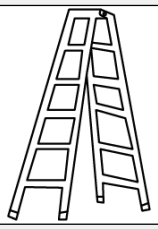	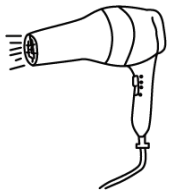	
Marker Pen	Insulated Ladder（＞2m）	Hot Air Dryer（1600W）	

Note: The above is for reference only and is inclusive and not limited to.

5.2 Mechanical Installation

5.2.1 Build the Foundation

(1) Location selection

When choosing the foundation site, please at least follow the following principles:

The climatic environment and geological conditions (such as stress wave emission and groundwater level) of the installation site of the energy storage integrated system should be fully considered.

The surrounding environment is dry, well-ventilated and far away from flammable and explosive areas.

The soil at the installation site needs to have a certain degree of compaction. It is recommended that the relative density of the soil at the installation site be ≥98%. If the soil is loose, be sure to take measures to ensure the stability of the foundation.

(2) Foundation requirements

An unreasonable foundation construction plan will bring significant difficulties or troubles to the placement, door opening and closing, and later operation of the energy storage integrated system. Therefore, the installation foundation of the energy storage integrated system must be designed and constructed in advance in accordance with certain standards to meet the requirements of mechanical support, cable routing, and later maintenance and repair.

When building the foundation, at least the following requirements should be met:

The bottom of the foundation pit for building the foundation must be filled and compacted.

The foundation should be sufficient to provide effective support for the equipment. The load-bearing capacity of the foundation must not be less than 2t.

The foundation should meet the minimum floor area required for the cabinet.

The construction ground should be flat and even without any slope to prevent uneven structural stress or door deformation caused by the tilt of the cabinets.

The construction ground should be designed with a slope or drainage ditches to prevent rainwater accumulation.

The product needs to be installed on a concrete foundation or a structure supported by channel steel with a flame-retardant surface. It is necessary to ensure that the foundation is flat, solid, safe and reliable, and has sufficient bearing capacity.

5.2.2 Foundation Construction Method

Please refer to the cabinet base structure below for foundation planning and construction.

Tip:

When constructing the foundation, ensure cable access holes are reserved.

It is recommended to install the cabinet on a self-built concrete foundation. Refer to the cabinet's dimensions to determine the appropriate foundation size. The cabinet layout and cable access hole distribution are shown in the figure below. If underground cabling is considered, also reserve a cable trench (depth < 100mm).

Determine mounting hole positions per the diagram below, drill holes, and install expansion anchors:
1. Mark the base mounting holes on the concrete foundation using the cabinet bottom mounting slot layout diagram. Use a hammer drill to create holes with a diameter of 14mm and depth of 80mm.
2. Take 4 expansion bolts and tap them into the four holes using a rubber mallet. Ensure the expansion anchors are fully seated in the holes.
3. Set aside the hex nuts, spring washers, and flat washers for cabinet installation preparation.
Note: Since cabinet cables are typically thick, cable routing becomes difficult once the cabinet is installed. Therefore, lay the power cables before moving the cabinet to its designated installation location.

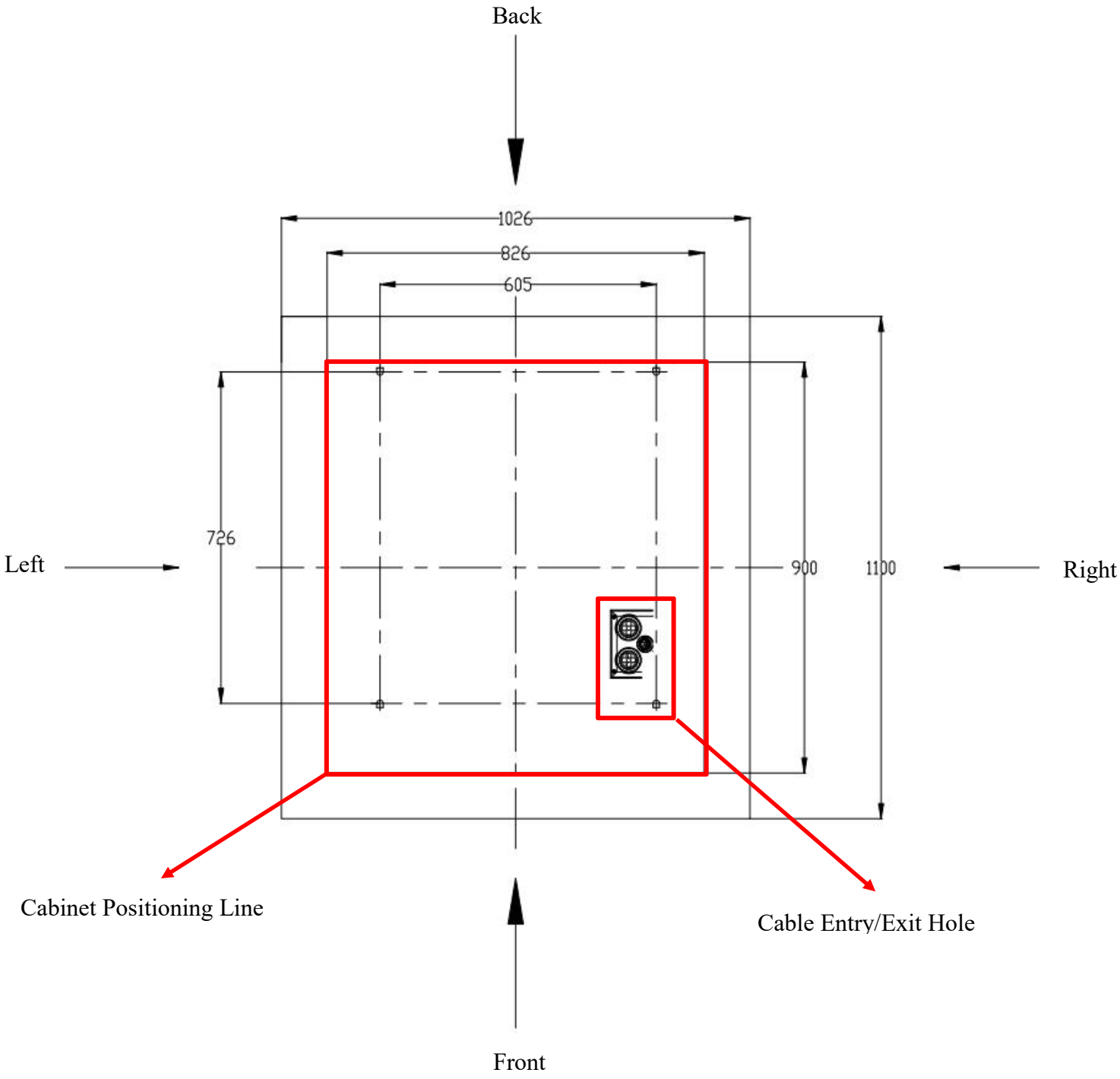

Figure 5.2.2.1 Cabinet Bottom Installation Slot and Cable Pass-Through Hole Positioning Diagram

5.2.3 Handling Equipment

(1) Handling Precautions

A. Precautions for lifting and transportation

When lifting the equipment, at least the following requirements must be met:

- Safety must be ensured at the site when lifting.

● When lifting and transportation operations are carried out, professional personnel should be involved and direct the whole process on site.

● The strength of the slings used should be able to withstand the weight of the equipment and a test lift should be attempted before transportation.

● Ensure that all sling connections are safe and reliable, and ensure that the sections of slings connected to corner pieces are of equal length.

● The length of the slings can be adjusted appropriately according to the actual requirements on site.

● Make sure that the equipment is smooth and does not deflect during the whole lifting process.

● Please use the four lifting rings of the equipment to lift the equipment.

● Make sure that the front and rear doors are locked during the lifting process, and take all necessary auxiliary measures to ensure the safe and smooth lifting of the equipment.

● The equipment can be lifted from the ceiling using slings with hooks or U-hooks. The lifting device should be properly connected to the equipment.

To move cabinets using lifting devices, special slings should be used, and the strength of the slings should be able to withstand the weight of the product. Before lifting, make sure that the lifting ring is installed tightly, all sling connections are safe and reliable, and make sure that each section of the sling connected to the lifting ring is of equal length to keep the cabinet balanced and avoid tilting of the cabinet resulting in the center of gravity shifting.

During lifting operations, movement should be slow and steady. A tow rope should be used to help adjust the cabinet’s direction and maintain its stability. The cabinet must always be placed on a solid and level surface.

Throughout the entire lifting process, all relevant safety operation standards must be strictly followed. It is strictly prohibited for personnel to stand beneath the cabinet or within any area where it could potentially tilt or fall.

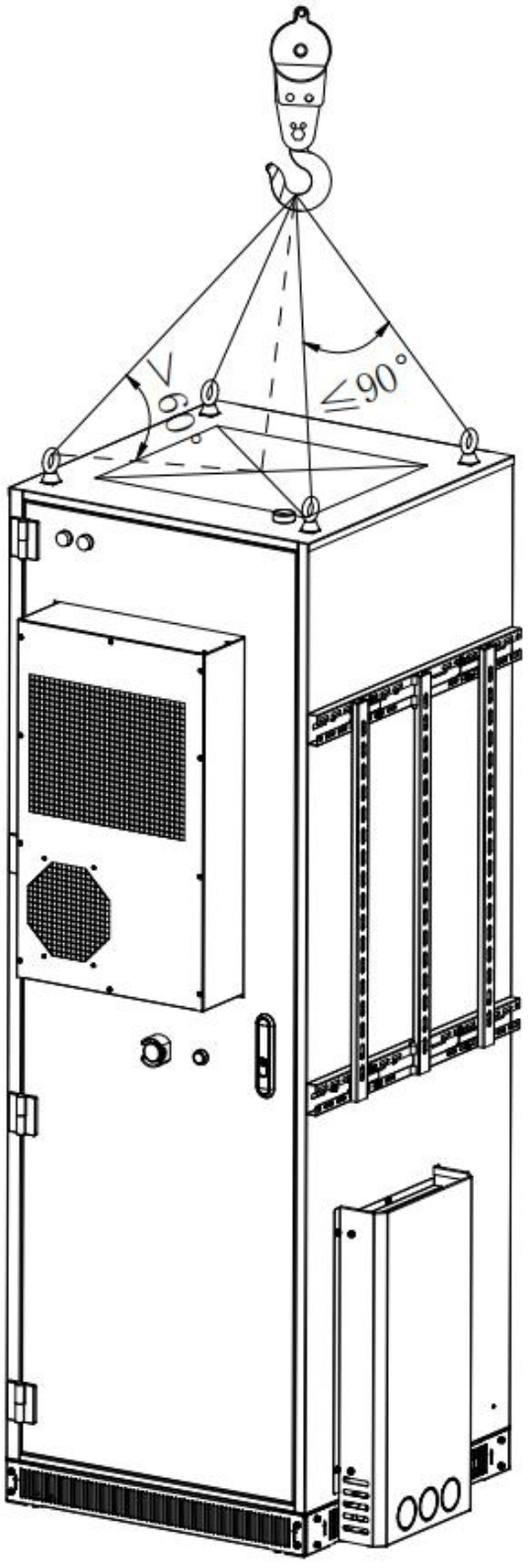

Figure 5.2.3.1 Lifting Schematic

Note: When hoisting, the ring head bolts need to be manually installed to the top of the cabinet and must be tightened. After hoisting, this bolt does not need to be removed.

B. Forklift Transportation Precautions

The bottom of the unit is equipped with fork holes designed for forklift transportation. Move the unit through the side fork holes.

If a forklift is used for transportation, the following requirements should be met:

- The forklift should be able to carry the weight of the device, the recommended forklift capacity is ⩾ 2t.
- The forklift should have appropriate leg lengths, and it is recommended that a test forklift be used prior to transportation.
- The equipment should be kept stable during the moving process, and should not be moved up and down or tilted too much.
- Lifting and lowering should be done gently, avoiding shock or vibration, and paying attention to the ground level when moving.
- Moving should be done by professional personnel, and they should participate in the whole operation command on site.
- Make sure the front and rear doors of the cabinet are locked before moving to avoid equipment damage or personnel injury.
- Take all necessary supporting measures to ensure the safe and smooth transportation of the electrical cabinet to the target location.

Using a forklift to move the product is the standard method of transportation. When handling, the center of gravity of the product should fall between the two forks of the forklift and be pre-inserted to ensure that it will not tilt after being fork lifted. The fork length of the forklift should not be less than 2.1m as shown in the diagram.

When using a forklift truck to fork lift, lower and move the product, it should be ensured that it is slow and smooth, and the cabinet must be placed on a firm and flat surface.

In the whole process of using forklift operation, the forklift safety operation specification must be strictly observed. Due to the large size of the product, so it may block the driver's vision, there should be auxiliary personnel to cooperate.

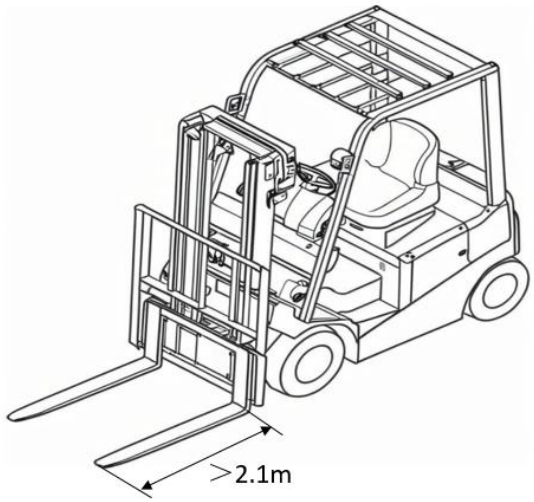

C. Precautions for transportation by pallet

Moving the equipment by pallet is only applicable when the transportation route is relatively flat. When the equipment is moved, its center of gravity should fall between the two forks of the pallet truck and be pre-inserted to ensure that it will not tilt after the fork lift. As shown in the figure, the length of the fork of the pallet truck shall not be less than 1.5m, the two fork arms of the pallet truck, the distance between the outer sides shall not be more than 0.56m, and the load-bearing capacity of the pallet forklift truck shall be more than 2t.

When using a pallet truck to lift, lower, or move the equipment, operations must be carried out slowly and smoothly. The equipment should always be placed on a solid and level surface.

Throughout the entire pallet truck operation, all relevant safety procedures must be strictly followed. Due to the large size of the equipment, the operator's visibility may be limited; therefore, auxiliary personnel should be present to assist and ensure safe movement.

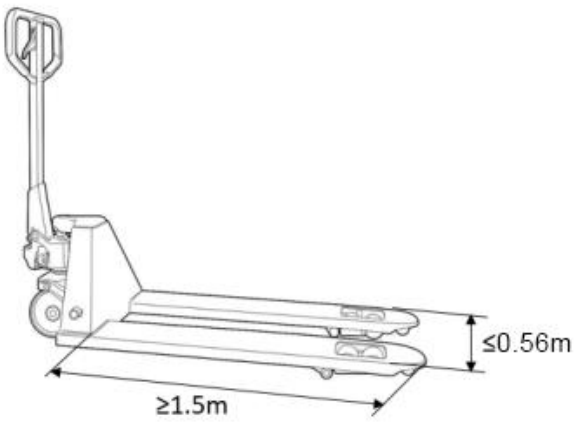

5.2.4 Fixed Equipment

The product is installed outdoors, must ensure that the ground is flat and solid, safe and reliable, and has sufficient bearing capacity (not less than 2t and >1500kg/m^2).

Use M12*80 expansion screws to fix with the floor, there are a total of 4 positions, recommended torque 80N•m. The following figure:

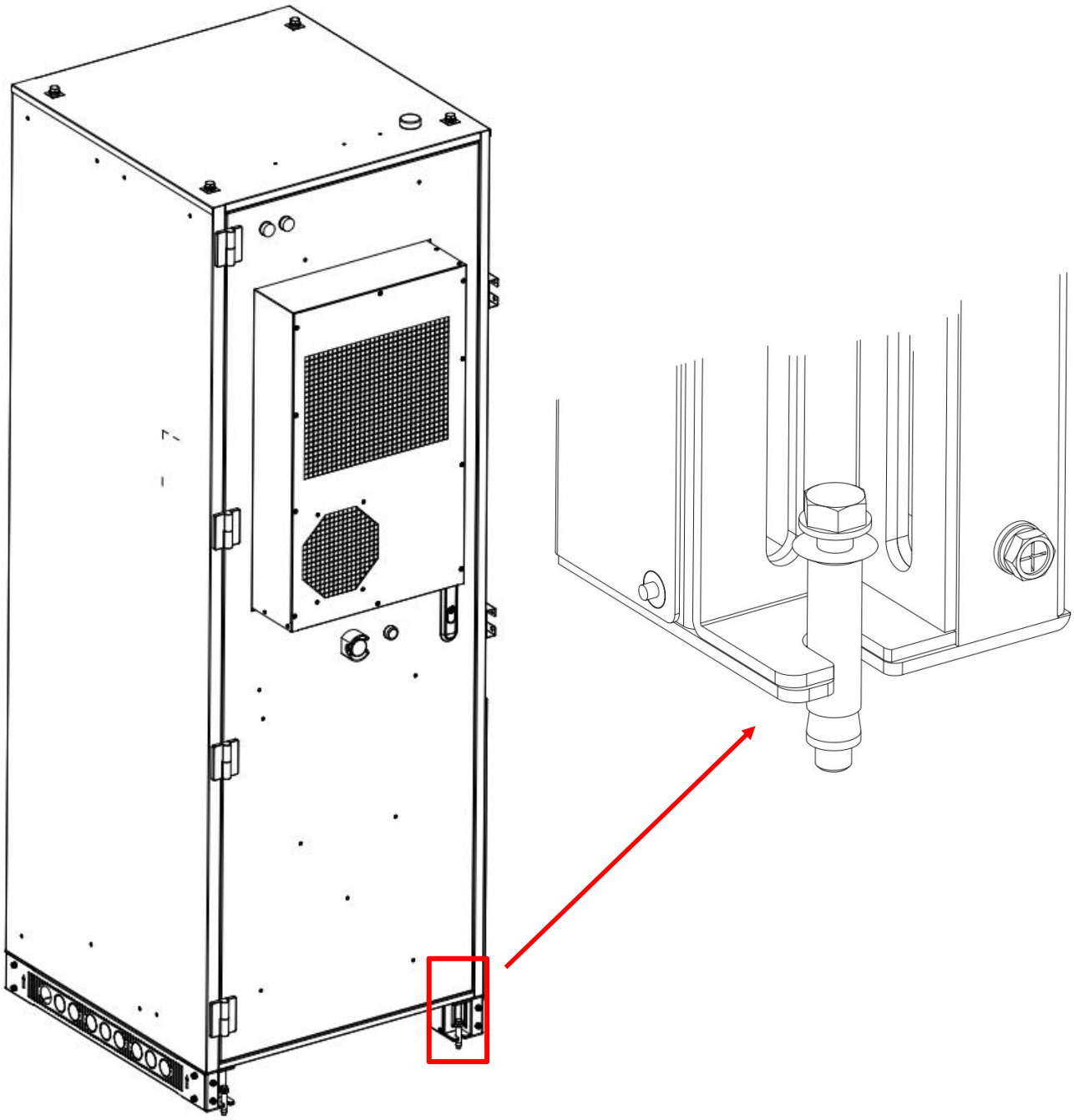

Figure 5.2.4.1 Expansion bolt fixing drawing

5.2.5 Inverter Installation Guide

In response to the installation requirements of side-mounted inverters on battery cabinets, the following weight limit standards are specially formulated:

The weight of the side-mounted inverter must not exceed 110kg. This restriction is based on a comprehensive consideration of multiple factors such as the load-bearing capacity, structural design, and electrical safety of the battery cabinet. During the installation process, this weight limit must be strictly followed to ensure the normal and stable operation of the battery cabinet system and at the same time guarantee the personal safety of the operators.

Installation steps

Step 1：Adjust the cabinet frame.

(1) Loosen the eight screws on the cabinet bracket as shown in the following figure and set it aside (Figure 5.2.5.1).

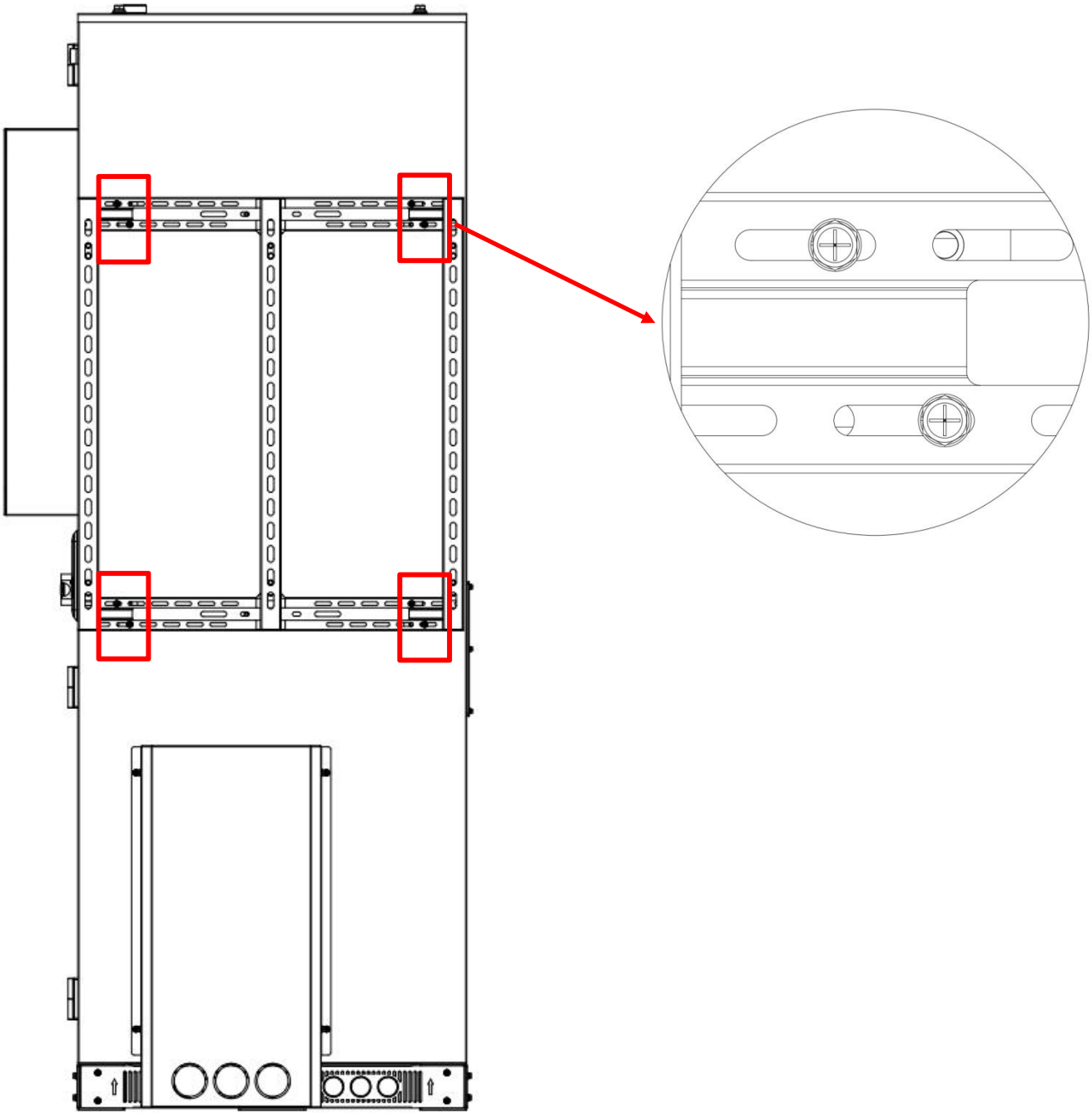

Figure 5.2.5.1 Bracket Adjustment Schematic Diagram 1

(2) Adjust the internal nut plates of the cabinet supports and slide rails to the appropriate positions by referring to the installation holes of the inverter's built-in brackets (Figure 5.2.5.2).

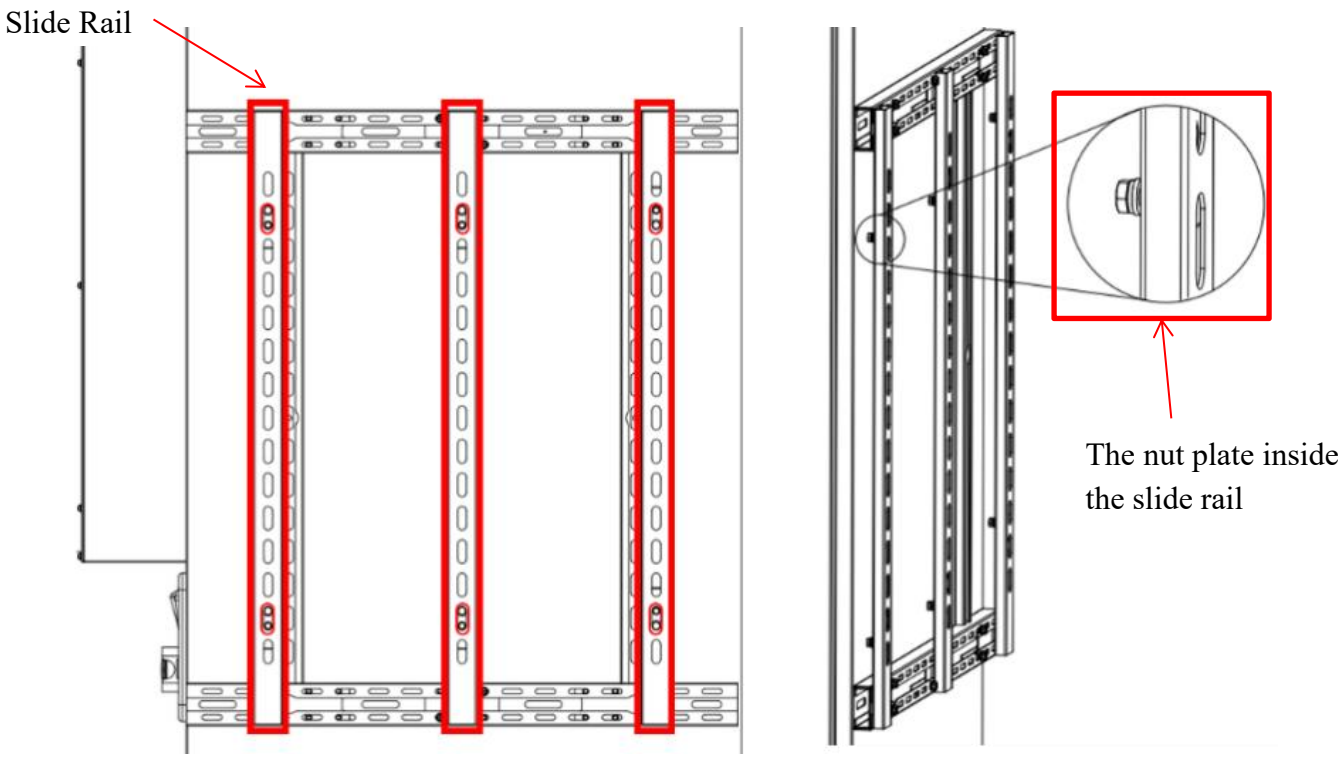

Figure 5.2.5.2 Bracket Adjustment Schematic Diagram 2

(3) Reinstall the screws removed previously back into the cabinet bracket to complete the fixing of the slide. In addition, the movement and fixation of the nut plate is mainly based on the tightness and looseness of the nuts on it (Figure 5.2.5.3).

Note: Since the distance from the inverter bottom to the cabinet bottom should be kept between 850mm ~ 910mm to ensure the length of the wire sufficient, please make sure to estimate the vertical position of the nutplates reasonably to avoid mounting the inverter too low or too high (Figure 5.2.5.3、5.2.5.4).

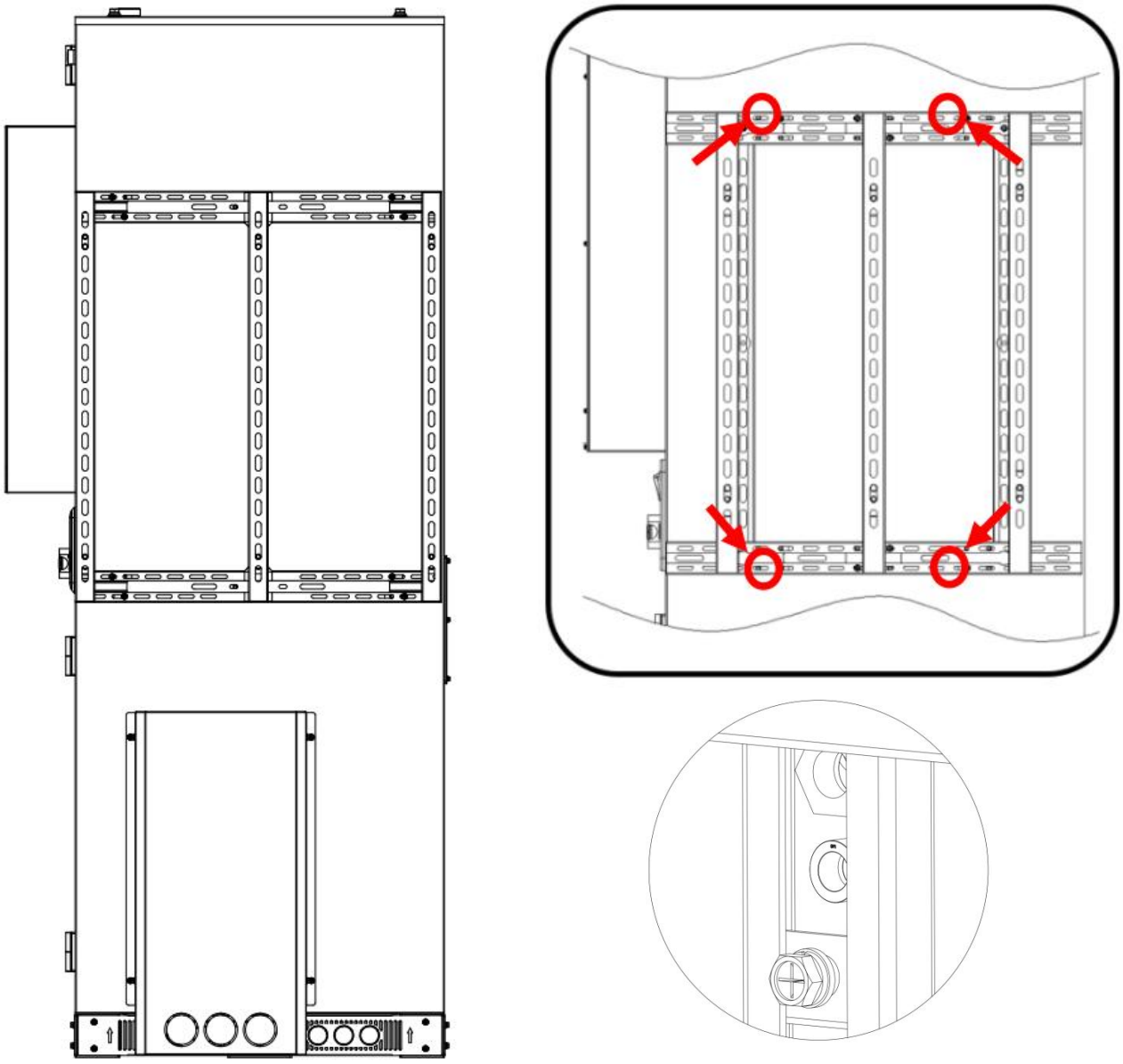

Figure 5.2.5.3 Bracket Adjustment Schematic Diagram 3

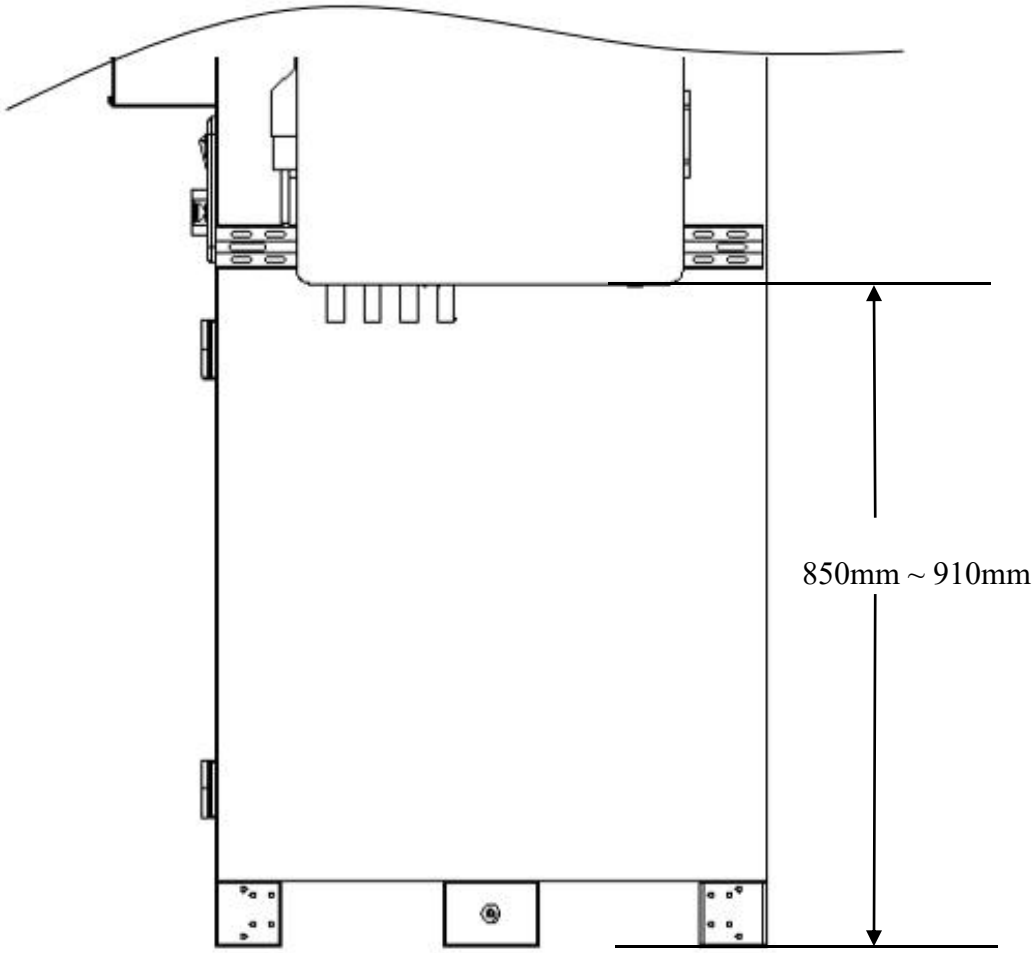

Figure 5.2.5.4 Bracket Adjustment Schematic Diagram 4

Step 2: Install the PCS onto the cabinet bracket

(1) Take the PCS installation bracket and install the PCS bracket on the cabinet bracket using 4pcs M8 or M10 bolts. When installing different PCS brackets, different fastening bolts are used. When using M10 bolts, please use M10 spring washers and flat washers together.

(2) Hang the inverter onto the bracket and fasten it securely in accordance with the professional user manual of the inverter.

5.3 Electrical Wiring

5.3.1 Wiring Precautions

⚠When connecting the wires, please make sure to complete them in order according to the contents of the manual, the ground connection must be completed first, and all the wiring work must be carried out in a no-voltage state. Before connecting the electrical cables, please make sure that the

control box air switch, miniature circuit breaker and all higher level switches are disconnected. And then check whether the cables between the battery modules are well connected, and keep a proper distance between the cables and the heat generating devices or heat sources, and leave at least 30mm of space around the cables to avoid the aging or breakage of the insulation layer due to high temperature.

5.3.2 Wire Harness Specification

NO.	Wire Harness Name	Recommended wire harness specification (minimum cross-sectional area)	Terminal Specification	Note
1	Battery to PCS power line (P+/P- line)	Split in two, 3AWG (26mm²) to 6AWG (13mm²)	/	The standard length is 2.5m, if the length is not enough, customers should match their own on site
2	230V auxiliary power supply line (L/N line)	14AWG（2mm²）	Tube terminal	Cables to be provided by the customer
3	Ground wire	8AWG（8mm²），1.5m	OT terminal M6	Shipping is standard
4	Communication lines with higher-level EMS	Ultra Category 5 Shielded Cable	/	If required, customers must provide their own
5	Communication line with PCS	Ultra Category 5 Shielded Cable	/	The standard length is 4.2m, if the length is not enough, customers should match their own on site
6	Emergency stop external wiring	14AWG（2mm²）	Tube-type terminals, fork-type terminals	If required, customers must provide their own
7	Power Lines from the Isolation Switch to the PCS (P+/P- Lines)	3AWG（26mm² ）	/	
8	Isolation Switch	Rated Voltage ≥ 1000 V Rated Current ≥ 120 A	/	Customers should provide their own on site

Note：Install an external double pole breaker.

Note: Cable specifications should be selected in accordance with local cable standards. Factors affecting the selection of cables include: rated current, cable type, laying method, maximum expected line loss, rated temperature, ambient temperature, temperature resistance, acidity, settlement, environmental protection requirements and so on.

Screw Specification	Recommended Torque
M6	5±10%N • m
M8	12±10%N • m
M10	26±10%N • m

5.3.3 Ground Line Connection

Step1: Connect the ground wire to the outdoor cabinet.

Take out the ground wire and use M6*14 screws to connect one end of the ground wire to the outside of battery cabinet, see the following figure for the exact position of the connection (Figure 5.3.3.1):

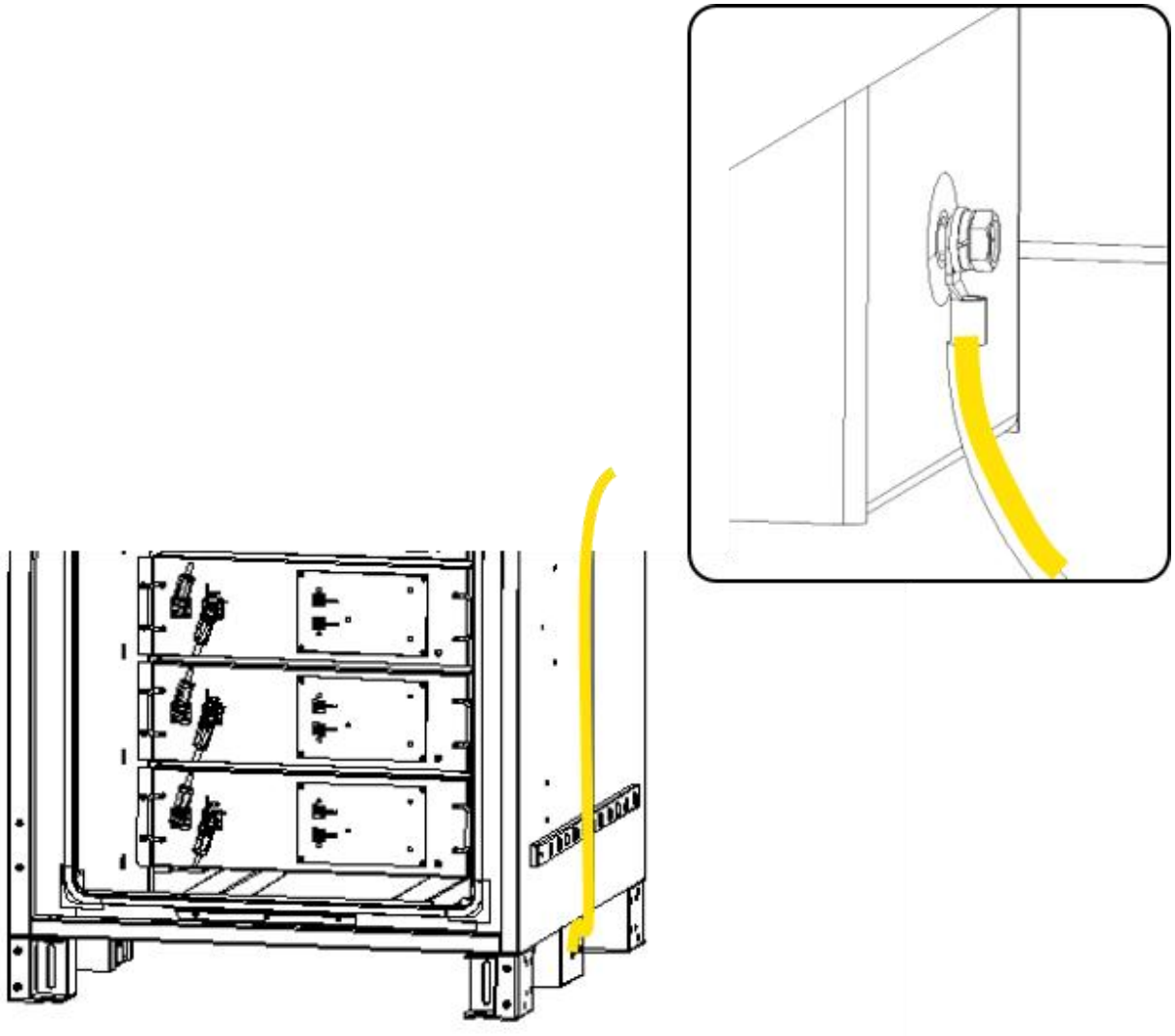

Figure 5.3.3.1 Schematic Diagram of Ground Wire Connection

Step 2: Connect ground wire to PCS or other external ground point.

The ground wire inside the system is connected before shipment. The ground wire from the system to other external grounding points such as PCS must be connected manually on site. Before connection, please connect the external ground wire properly according to local regulations. And then refer to the wiring guidance from the PCS side to see how to connect the ground wire to PCS.

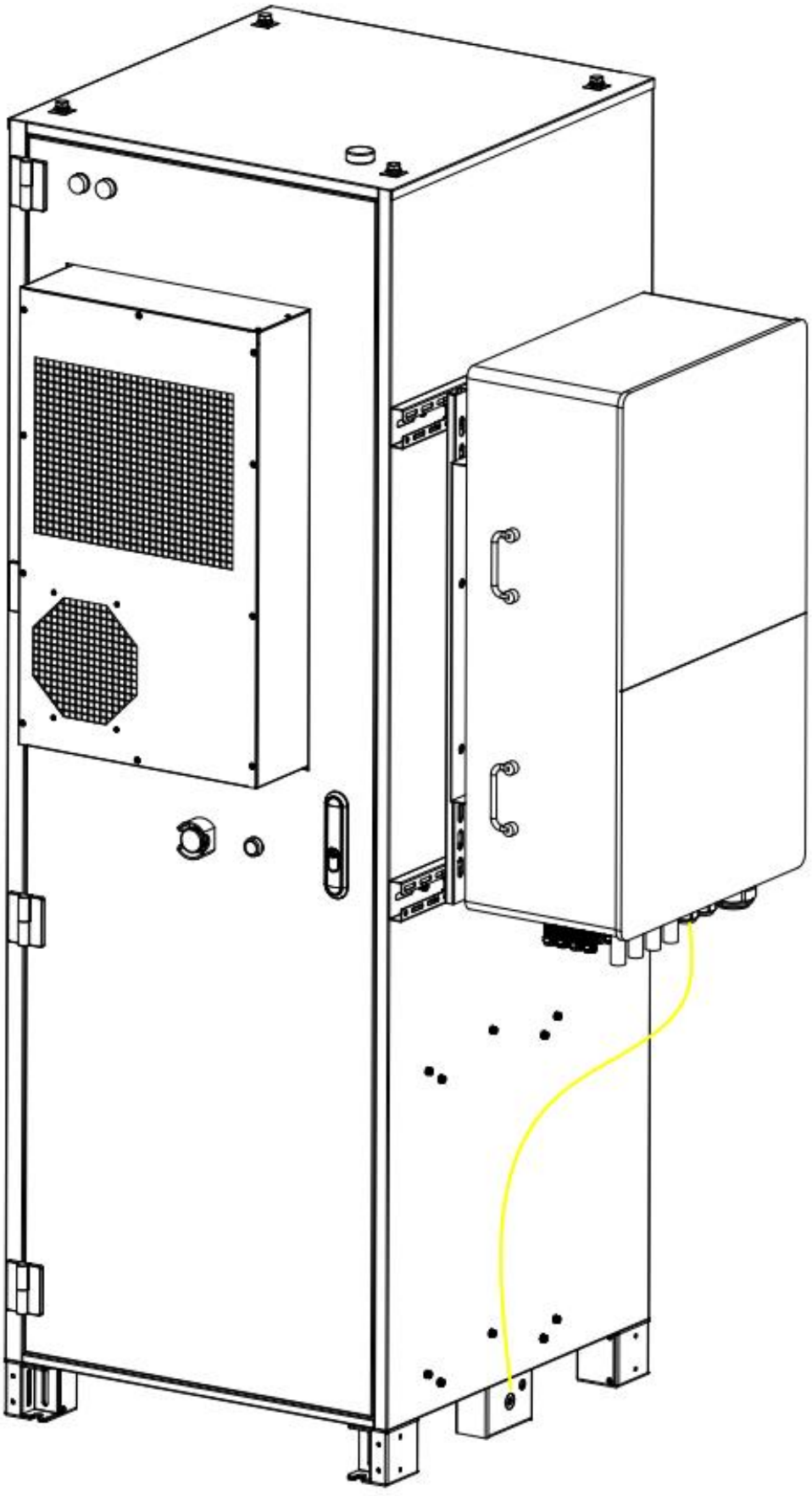

Figure 5.3.3.2 Single Cabinet Ground Connection

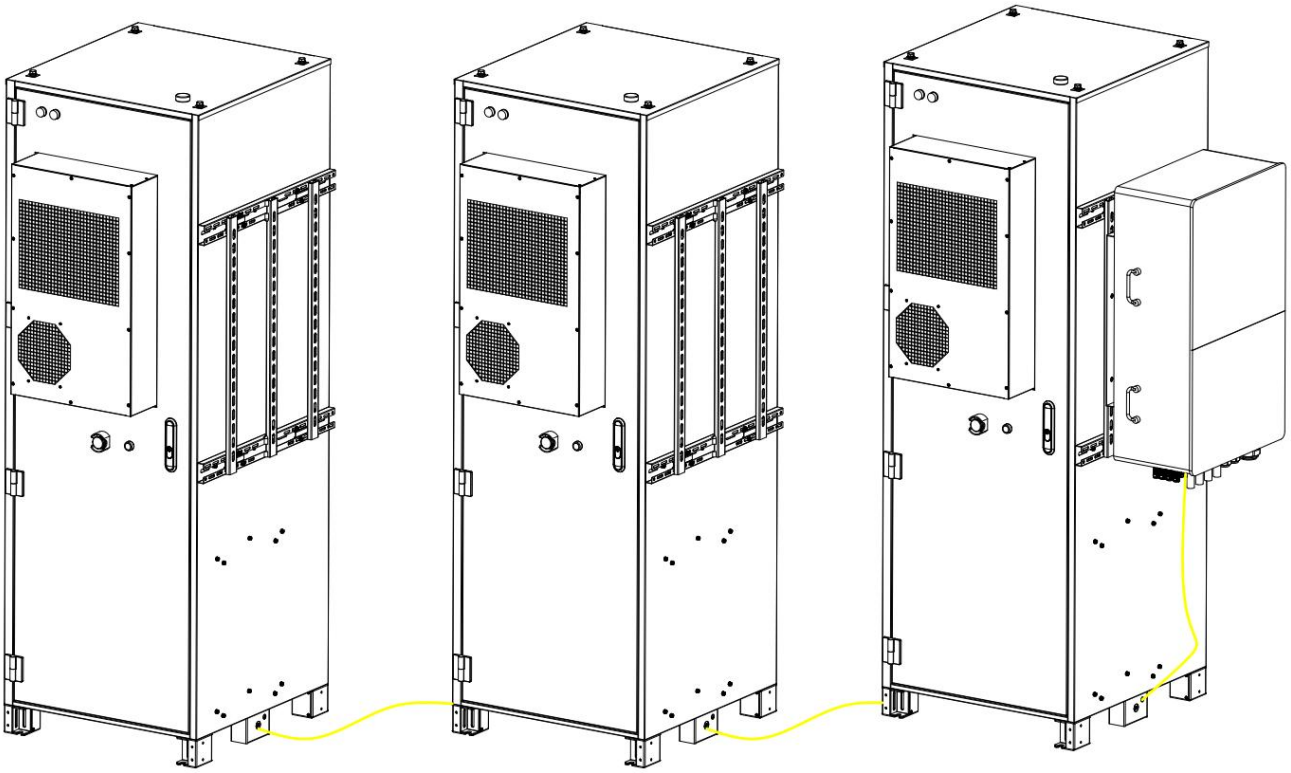

Figure 5.3.3.3 Multi-Cabinet Ground Connection

5.3.4 Power Line Connection

The power cables are mainly connected via copper rows. The structure of the power cable is shown in the following figure (Figure. 5.3.4.1)

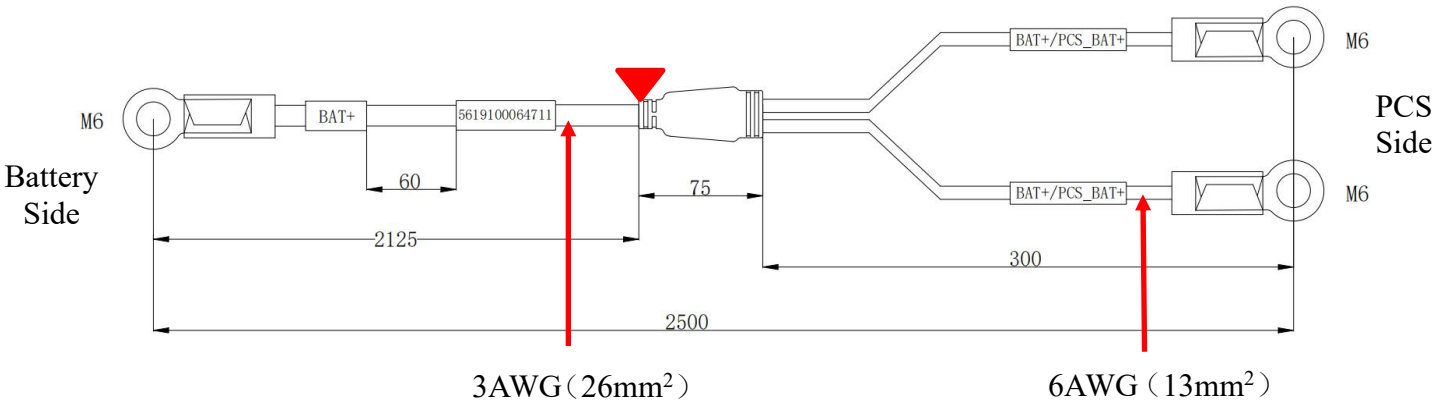

Figure. 5.3.4.1 Schematic Diagram of Power Line

Note: If the customer's inverter is configured with a single input line, the cable can be cut at the location marked “ ▼ ” in the diagram, then crimped and connected to the terminal.

If the customer has configured a single-input inverter, cut the cable at the location marked “ ▼ ” in the diagram, crimp the terminals to the isolating switch, and connect the other end to a

customer-supplied isolating switch leading to the PCS wiring harness.

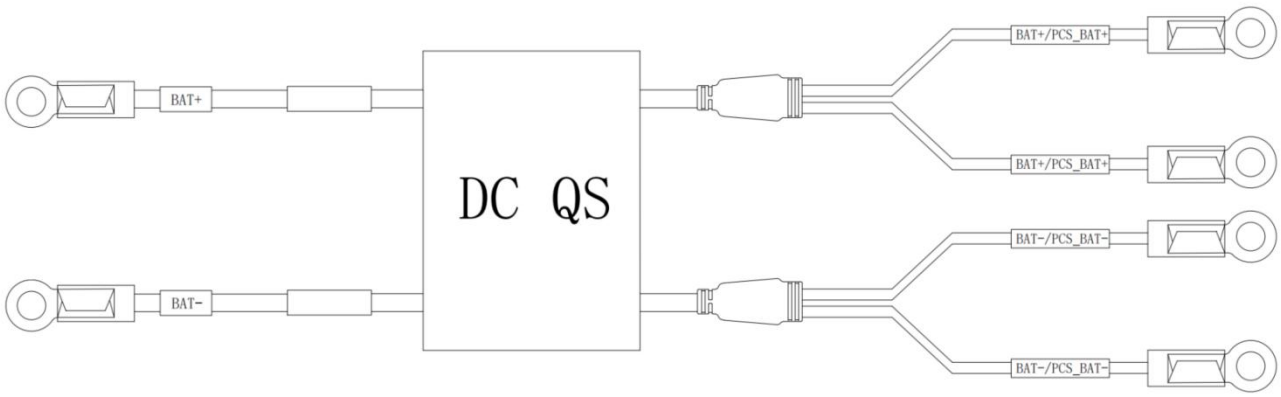

Figure 5.3.4.2 Schematic Diagram of Power Lines Connected to an External Isolating Switch

Wiring Instructions:

Step1: Remove the protective cover from the inside of the cabinet.

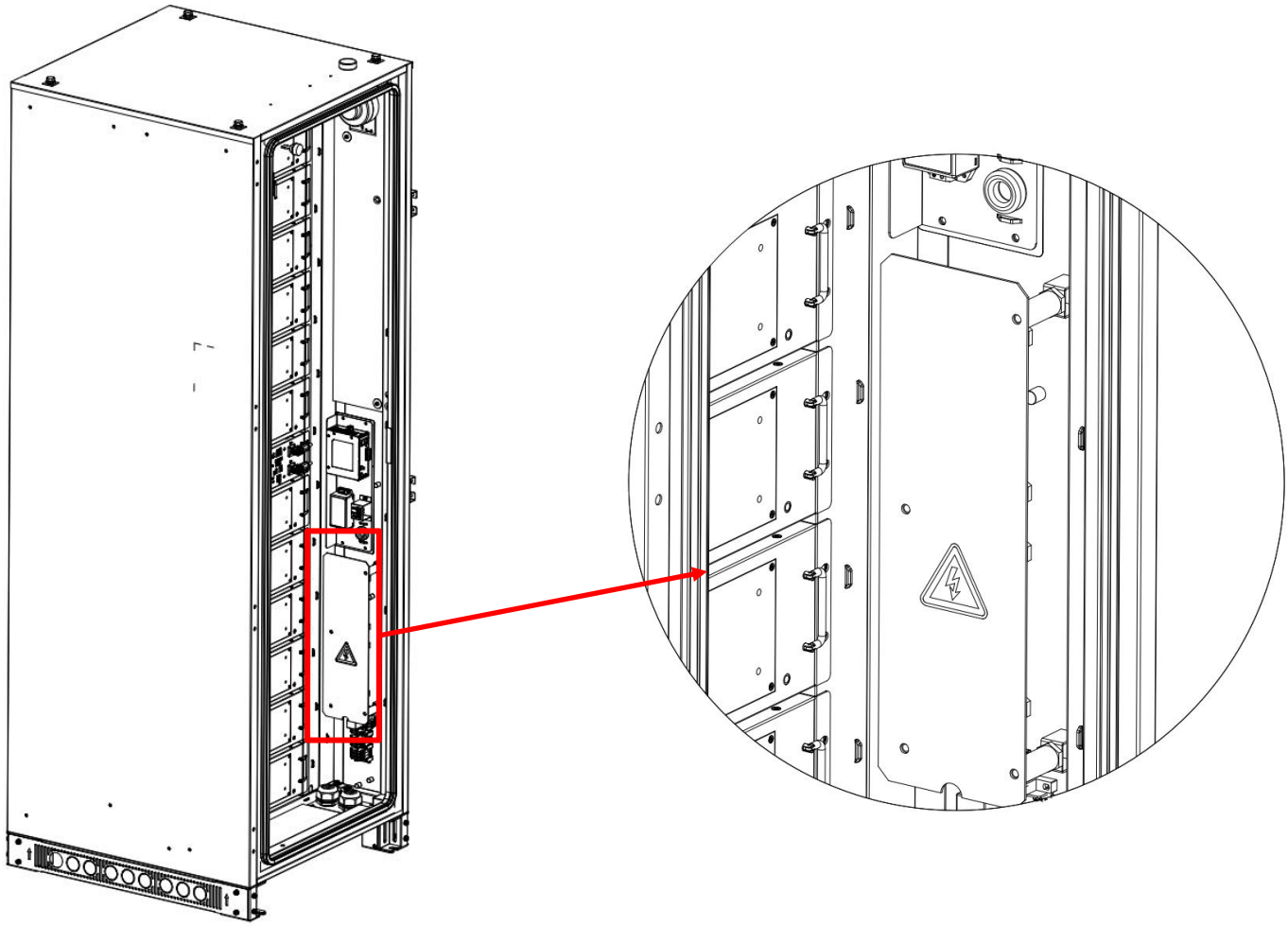

Figure. 5.3.4.3 Remove the Cover Plate

Step2: Lead power cable through the bottom of the routing holes.

Lead power line battery side through the Bottom Routing Hole of Outdoor Cabinet, refer to Figure 5.3.4.5. It is recommended to thread the line through the first Routing Hole of Battery Cabinet inside (Figure 5.3.4.6).

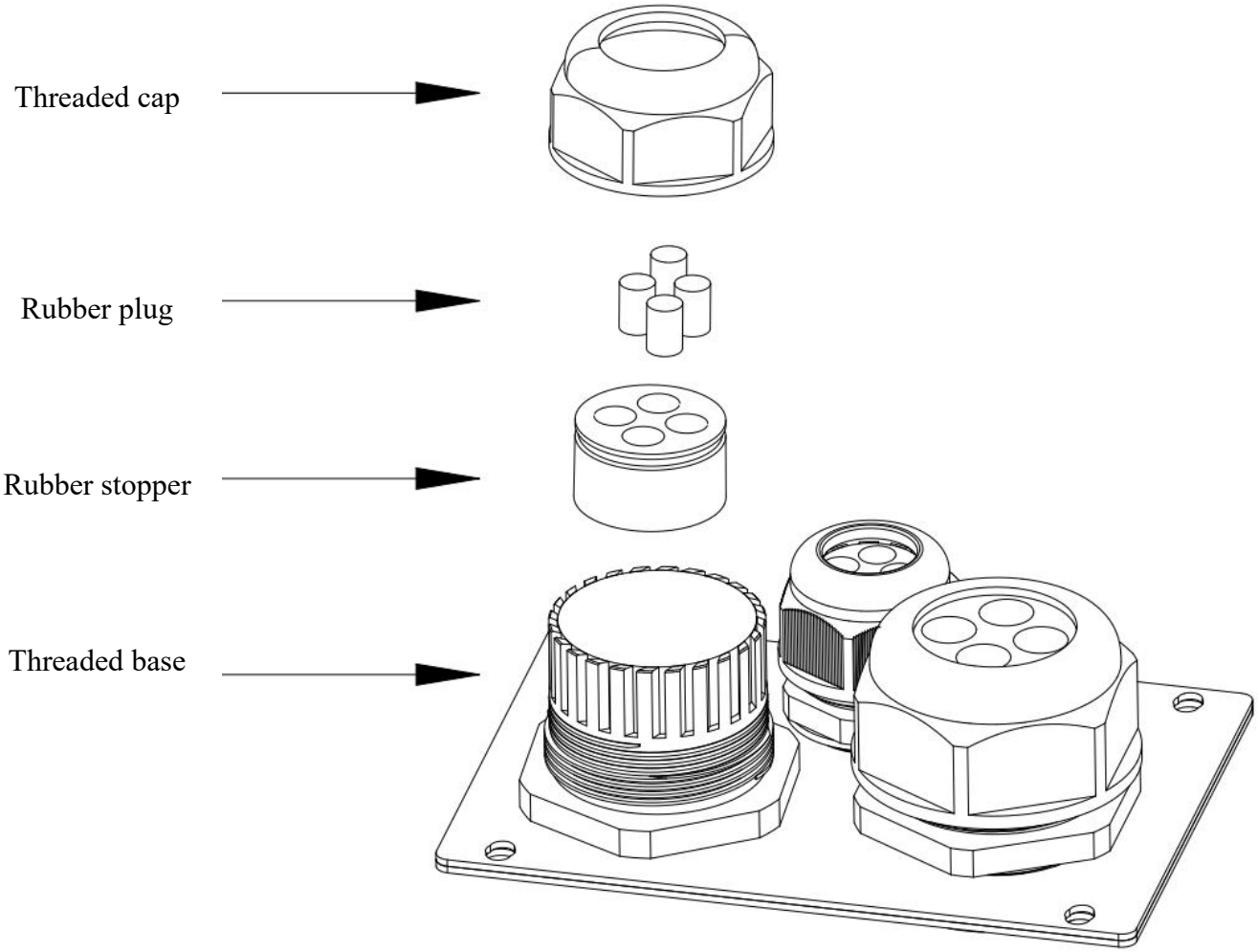

Figure 5.3.4.4 Internal Structure of the Wiring Hole

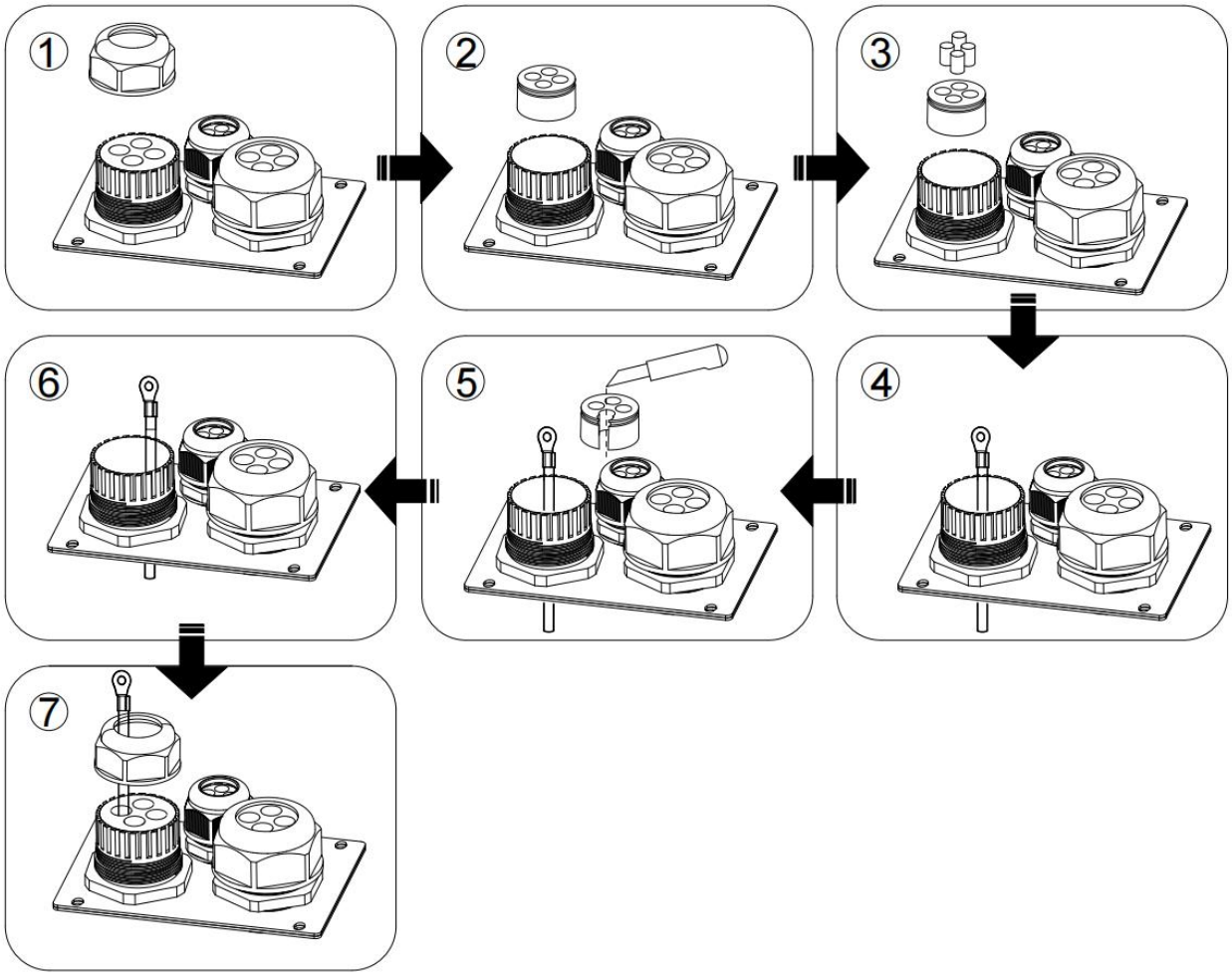

Figure 5.3.4.5 Threading Method

Explanation：

① Remove threaded cap.

② Remove rubber stopper.

③ Push out the suitable rubber plug.

④ Thread the cable through the routing hole.

⑤ Attach the rubber stopper to the cable. If necessary, cut the edge of the rubber stopper appropriately.

⑥ Push the rubber stopper back into the threaded base.

⑦ Replace the threaded cap and tighten it.

Note:

1、The rubber stopper and the rubber plug in the routing hole serve as seals to protect system against moisture, so do not remove them if there is no need to thread the wires.

2、Figure 5.3.4.5 is for reference only, please refer to the corresponding chapter for the specific route holes when threading.

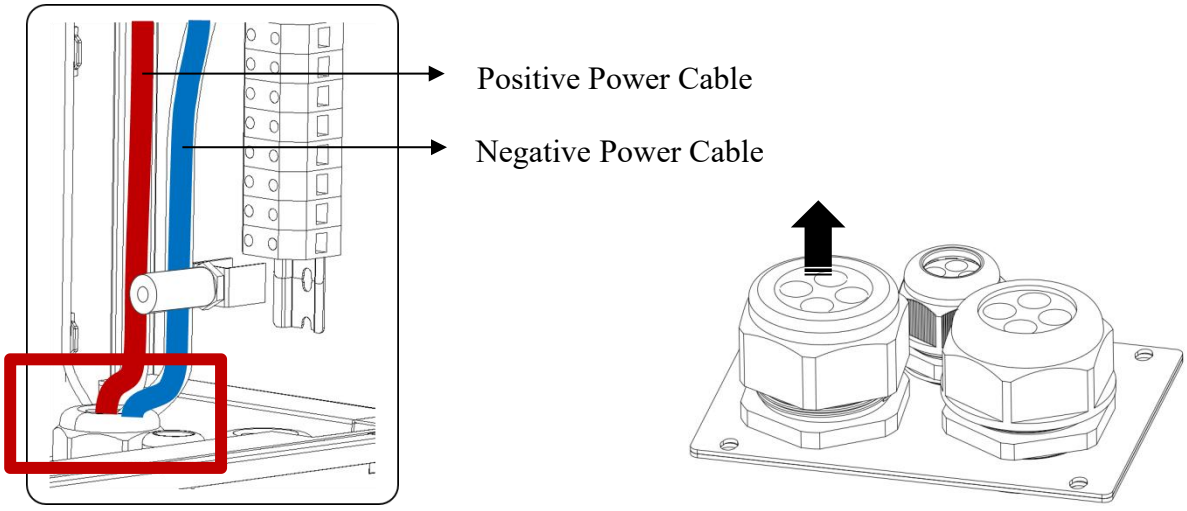

Figure 5.3.4.6 Schematic Diagram of Power Line Connection

Step3: Crimp the power cable to the copper row inside the outdoor cabinet.

Take M6*14 screws to crimp the battery side of power cable to the copper row inside the outdoor cabinet, do not connect the wrong way.

Note:

Positive copper row with red marking, negative copper row with black marking (Figure 5.3.4.7).

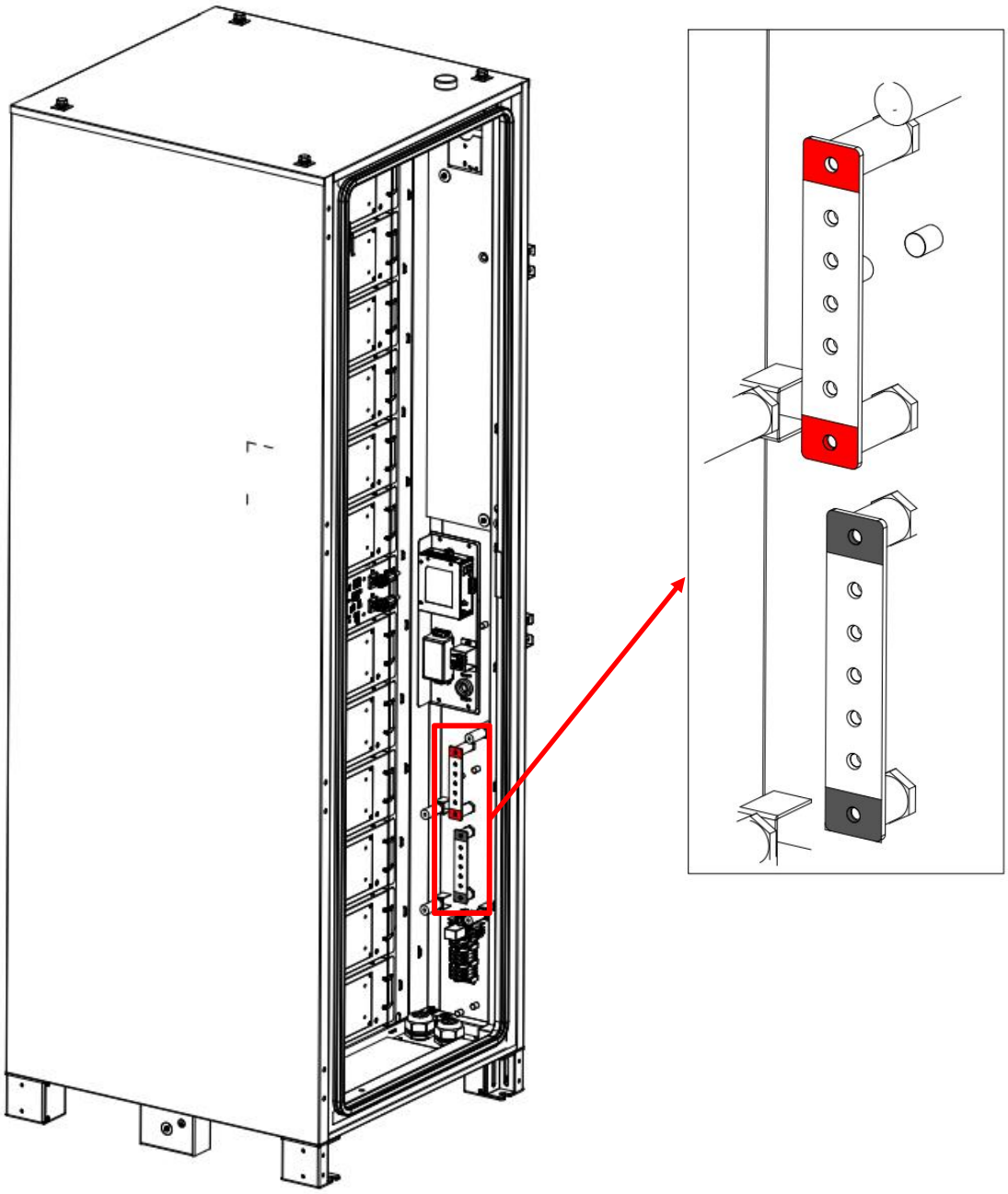

Figure 5.3.4.7 Schematic Diagram of the Connection of Power Line Copper Bars

Step4: Press the power line onto the PCS

The crimping of the PCS interface corresponds to the OT terminal of the PCS end. Due to the different brands of PCS, the wiring methods also vary. For the wiring on the PCS side, please refer to the instructions of the PCS manufacturer.

Step 5: Reinstall the protective covers on the interior walls of the cabinet.

After connecting the power lines, to ensure the customer's electrical safety, the protective covers that

were removed from the interior walls of the cabinet must be reinstalled (Figure 5.3.4.8), and the external isolating switch must be properly insulated.

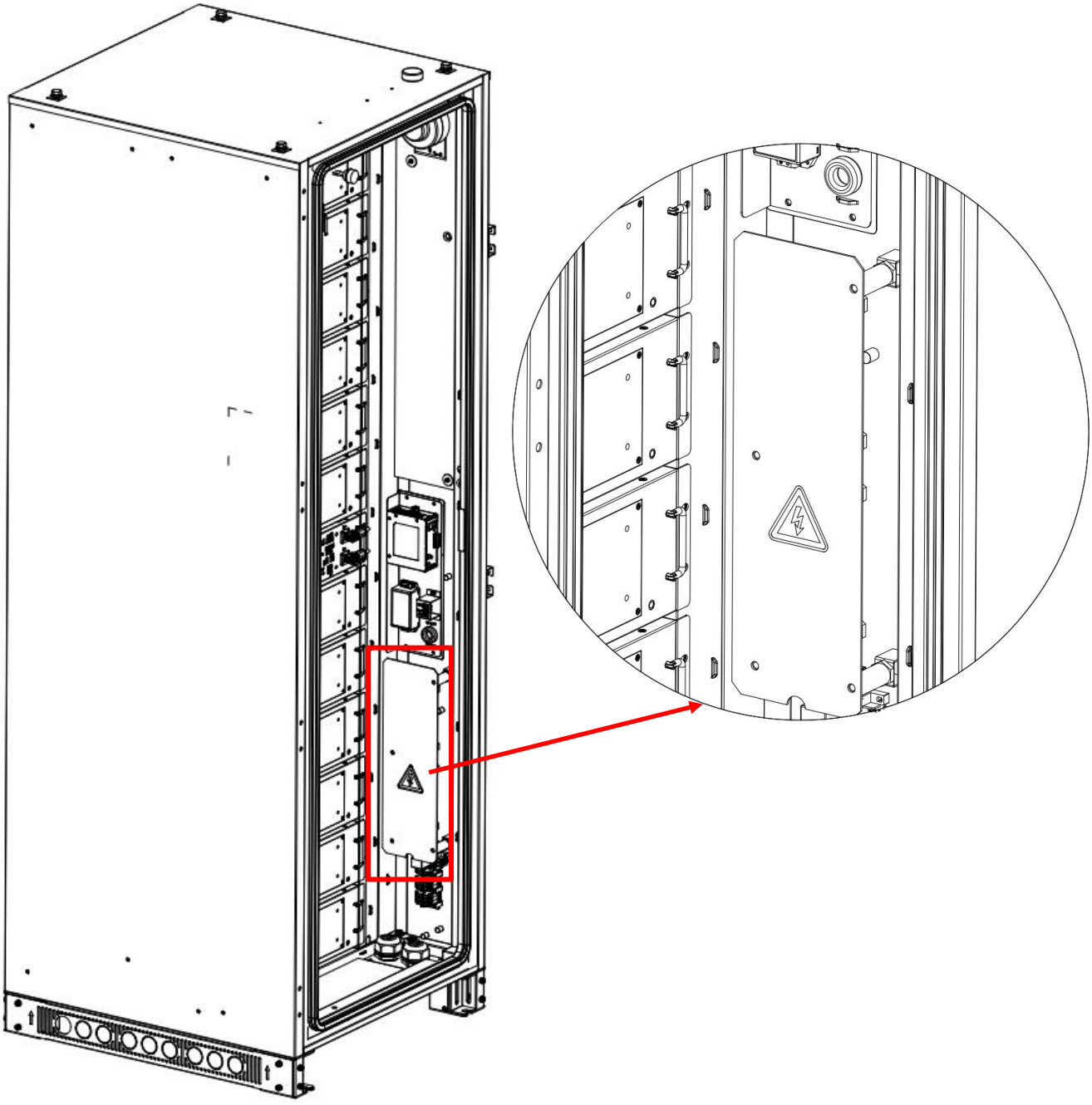

Figure 5.3.4.8 Reinstalling the Cover Plate

5.3.5 The Auxiliary Power Supply Line Connection

The internal power supply line of the system has been connected at shipment. The external auxiliary power supply line (L/N/PE line) of the system, one end connected to 230V mains power or AC 230V UPS, power ≤1kW, one end connected to the L/N/PE terminal block on the right side inside the

cabinet.

Air conditioning is powered by alternating current, and the recommended specification is 14AWG, 2mm² .

Note: The AC power supply is connected to the municipal power grid or an AC230V UPS to ensure stable power supply.

Step1: Wiring

Pull the power cord of the air conditioner through the wiring holes at the bottom of the cabinet. It is recommended to pass the power cord of the air conditioner through the middle wiring hole. Adjust the extension length of the air conditioner power cord, strip the wire and install the tubular pre-insulated terminal. The air conditioner power cord should be connected to the terminal block in three phases: L/N/PE respectively. Each phase of the cable needs to be used with the tubular terminal. The crimping method of the tubular terminal is shown in the following figure (Figures 5.3.5.1).

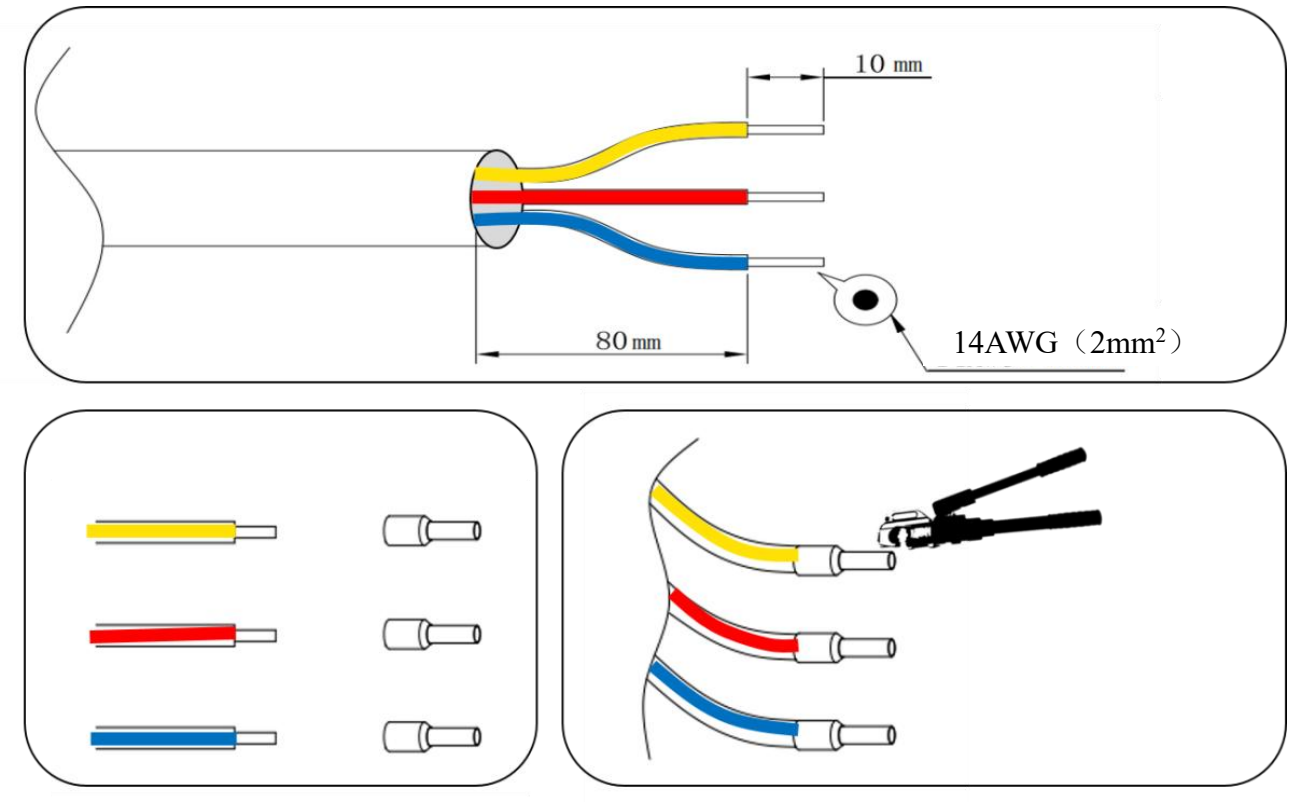

Figure 5.3.5.1 Crimping Method of Tubular Terminal

Explanation:

Peel off the power cord of the air conditioner to expose the L wire, N wire and PE wire of appropriate length inside. Then cut off the outer skin to expose the internal metal wire core. The

recommended peeling length is 10mm. Take 3 pieces of tube-shaped terminals and cover them with the aforementioned peeled metal wire core respectively. Use a wire crimping pliers to press the tube-shaped terminals tightly.

The power cord of the air conditioner is transferred through a terminal block, and the structure of the terminal block is shown in Figure 5.3.5.2. The internal electrical cables from the air conditioner to the terminal block will be connected at the factory. However, the electrical cables from the external AC lines to the terminal block need to be connected manually on site. When wiring, please ensure that the ports of the single-phase power lines (L、N、PE) are accurately connected (Figures 5.3.5.3).

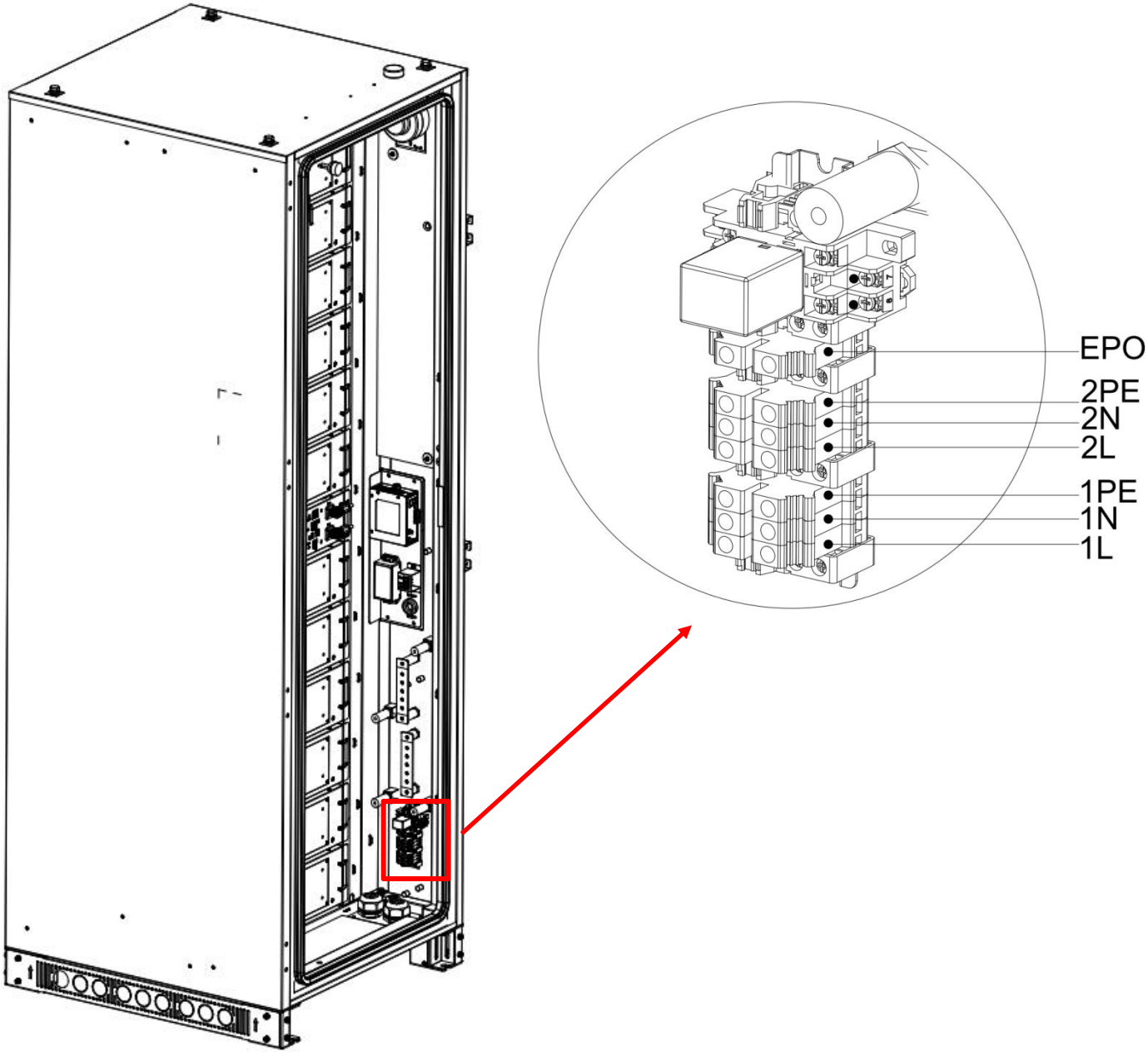

Figure 5.3.5.2 Schematic Diagram of Terminal Block

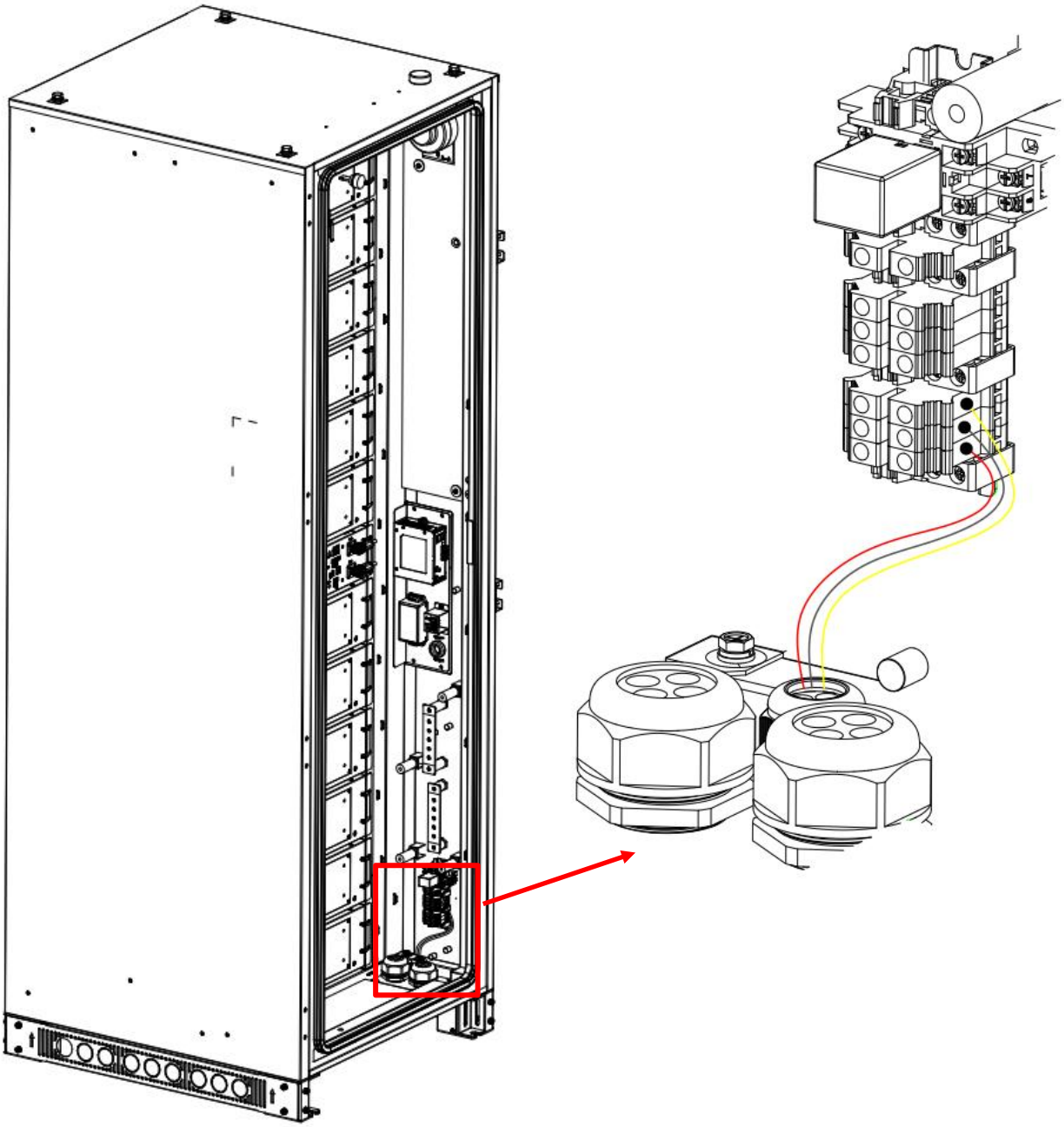

Figure 5.3.5.3 Schematic Diagram of Air Conditioner Power Cord Connection

Note:

When connecting, please ensure that the wire sequence of the L/N/PE wires corresponds one-to-one with those on the terminal block.

5.3.6 Communication Line Connection

The connection of communication lines is mainly achieved through the COM port.

Connect to the PCS communication line, pull the communication line through the bottom wiring hole (the middle wiring hole position, as shown in Figure 5.3.6.1), and connect the communication line to

the COM2 port of the outdoor cabinet control box (as shown in Figure 5.3.6.2).

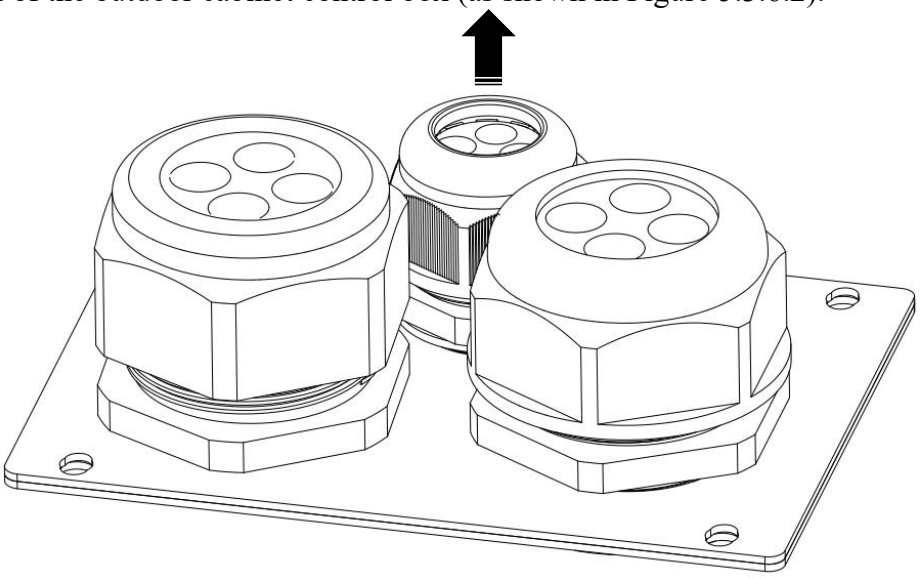

Figure 5.3.6.1 Schematic Diagram of the Communication Line Routing Channel

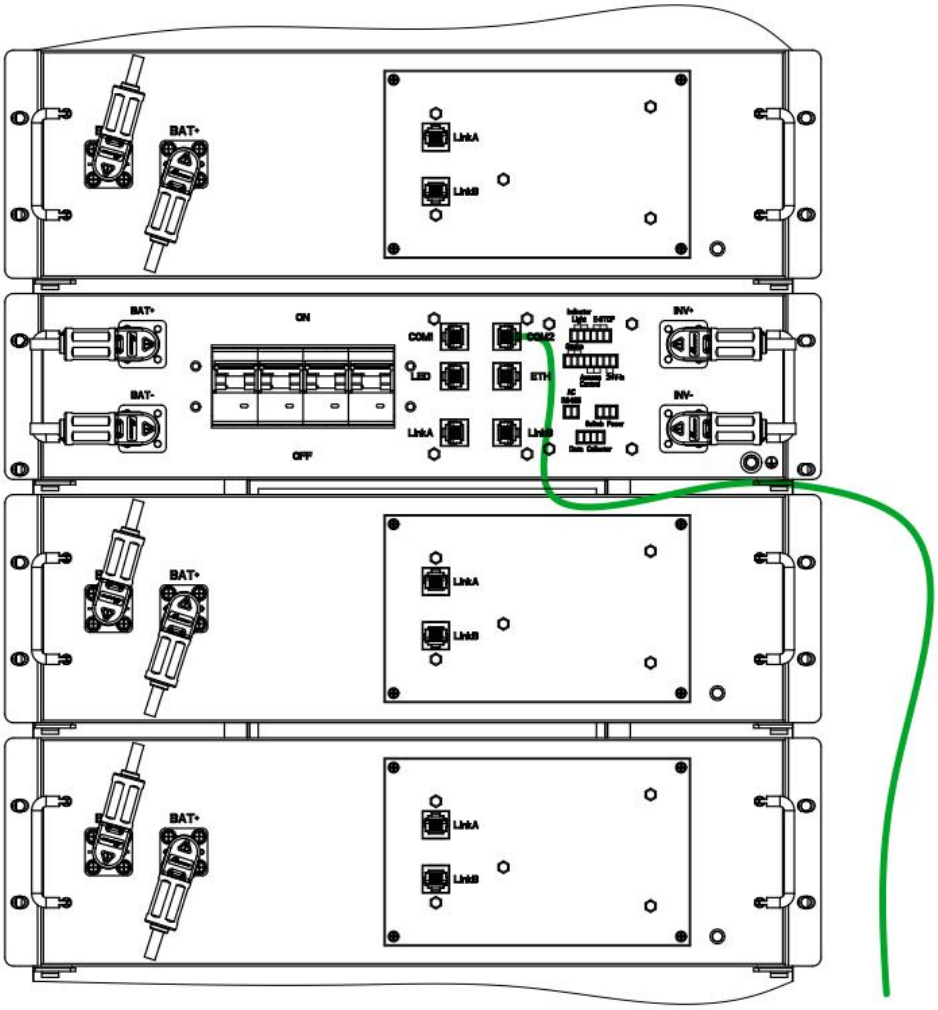

Figure 5.3.6.2 Schematic Diagram of Communication Connection Line for Outdoor Cabinet

Connect the LAN/WAN communication cable (Optional)

The connection port of the LAN/WAN communication line is on the data box. The position of the data box is shown in the following figure (Figure 5.3.6.3). Connect the LAN port to a PC to perform local device debugging, network distribution and other operations. Connect the WAN port to the router, and the data module can be networked through a wired method to connect the main cabinet to the IOT cloud platform.

Explanation：

The battery cabinet also supports wireless distribution network. If it is for wireless distribution network, please ignore the connection of the WAN port and complete the distribution network through the local browser.

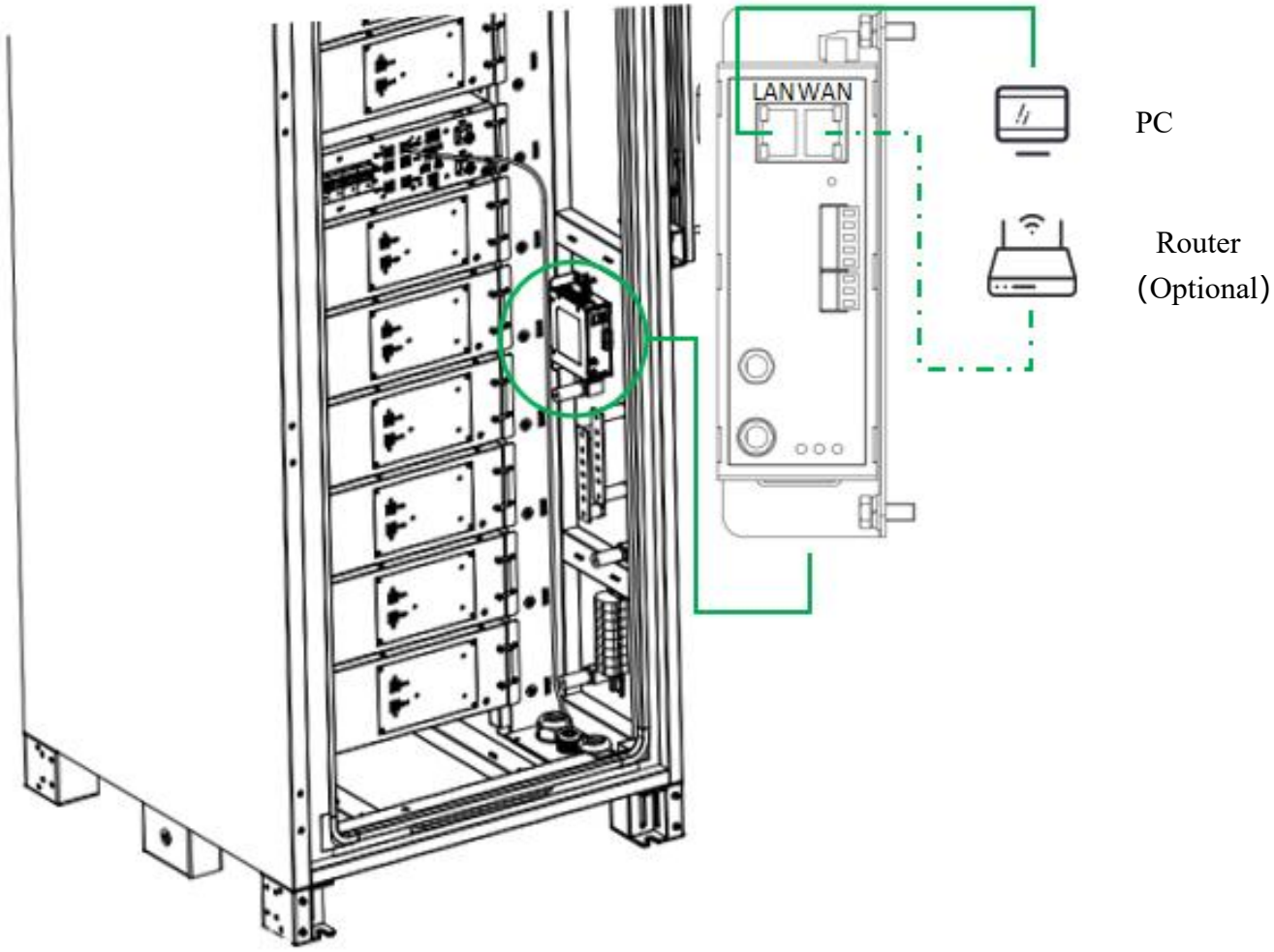

Figure 5.3.6.3 Schematic Diagram of LAN/WAN Communication Connection

Note: For detailed debugging and network configuration documents, please contact SUNWODA's after-sales service. Here's how to obtain them：

E-mail：technology@sunwoda.com

Phone：+61 0498353593

5.3.7 Install the Outer Cover Wire Board of the Cabinet

Step 1: First, install the panel at the bottom of the cabinet

Take out the left, right, front and back panels of the cabinet from the accessory box (the front and back panels are the same, and the left and right panels are the same), totaling 4 pieces. Take out M6*14 screws to install the panels, and tighten 4 pieces of each panel with screws (Figure 5.3.7.1).

Note: There are circular hole plates on the left and right baffles of the cabinet. According to the actual wiring method on site, the circular hole plates on the baffles can be appropriately removed for wiring (Figure 5.3.7.2).

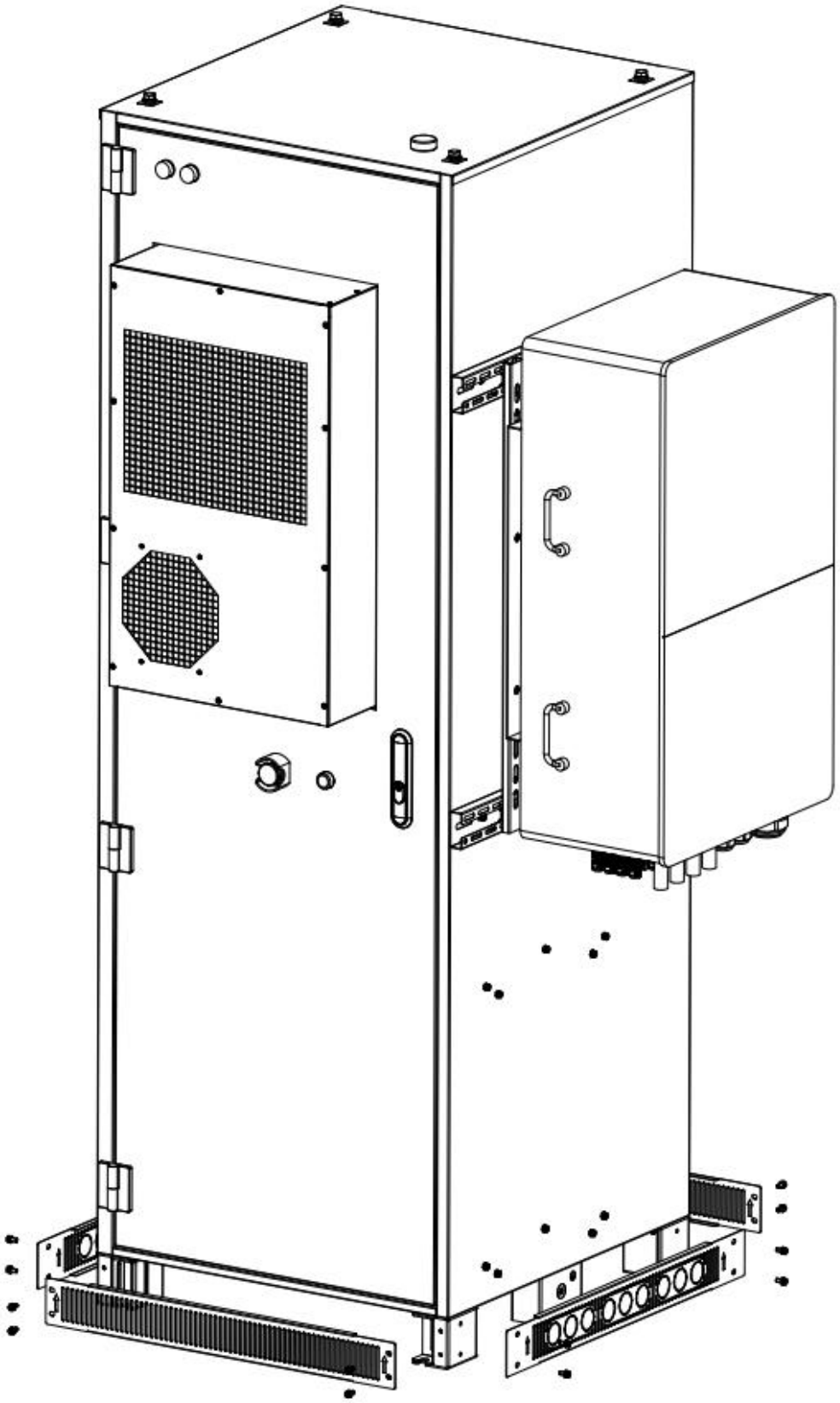

Figure 5.3.7.1 Install the panel at the bottom of the cabinet

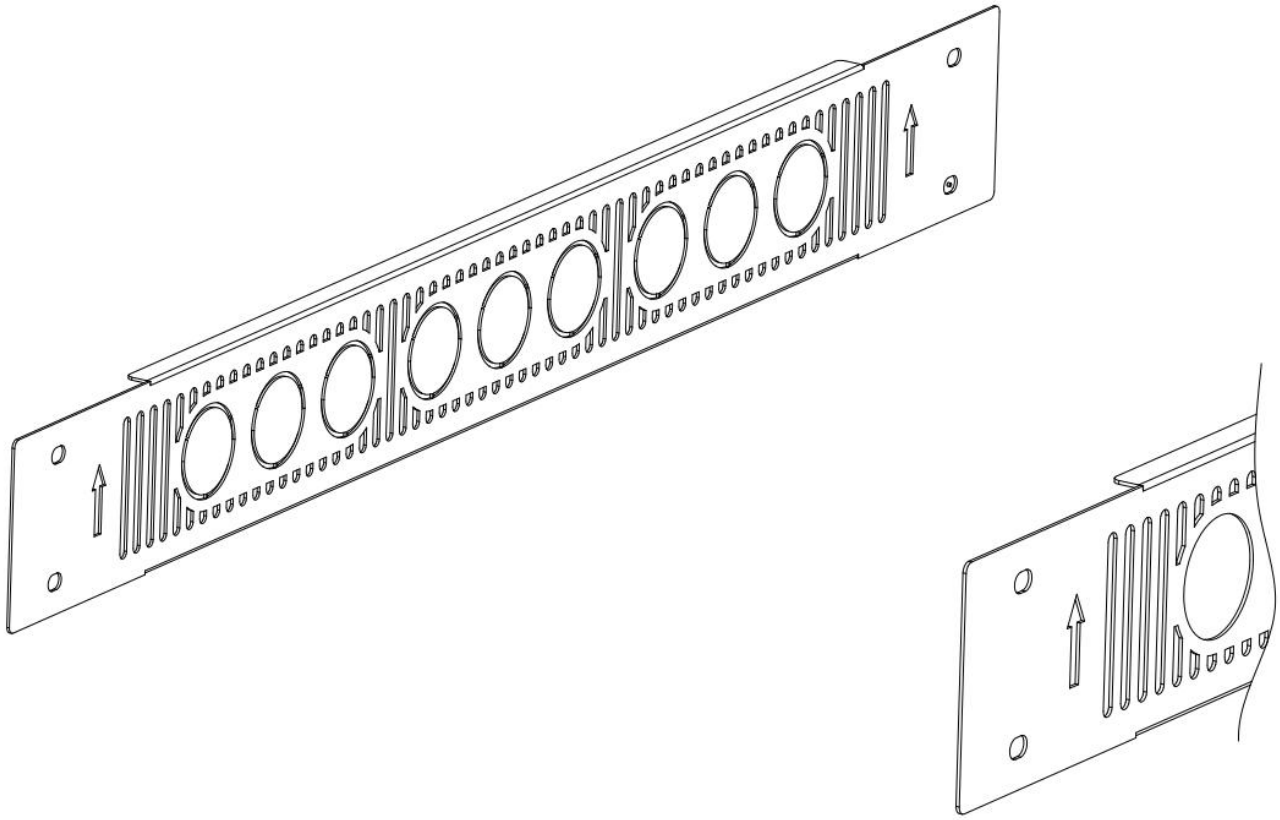

Figure 5.3.7.2 The circular plates on the left and right side panels of the cabinet can be removed as needed for cable routing

Step 2: Reinstall the Cover Plate

1. Remove the cabinet mounting screws and set them aside for safekeeping (Figure 5.3.7.3).

2. Retrieve the cover plate assembly from the accessory box. Remove the fastening screws on both sides and set them aside for safekeeping. Extract the two cable tie plates inside (Figure 5.3.7.4).

3. Select 6pcs from the removed screws. Install the extracted cable tie plates onto the cabinet (Figure 5.3.7.5).

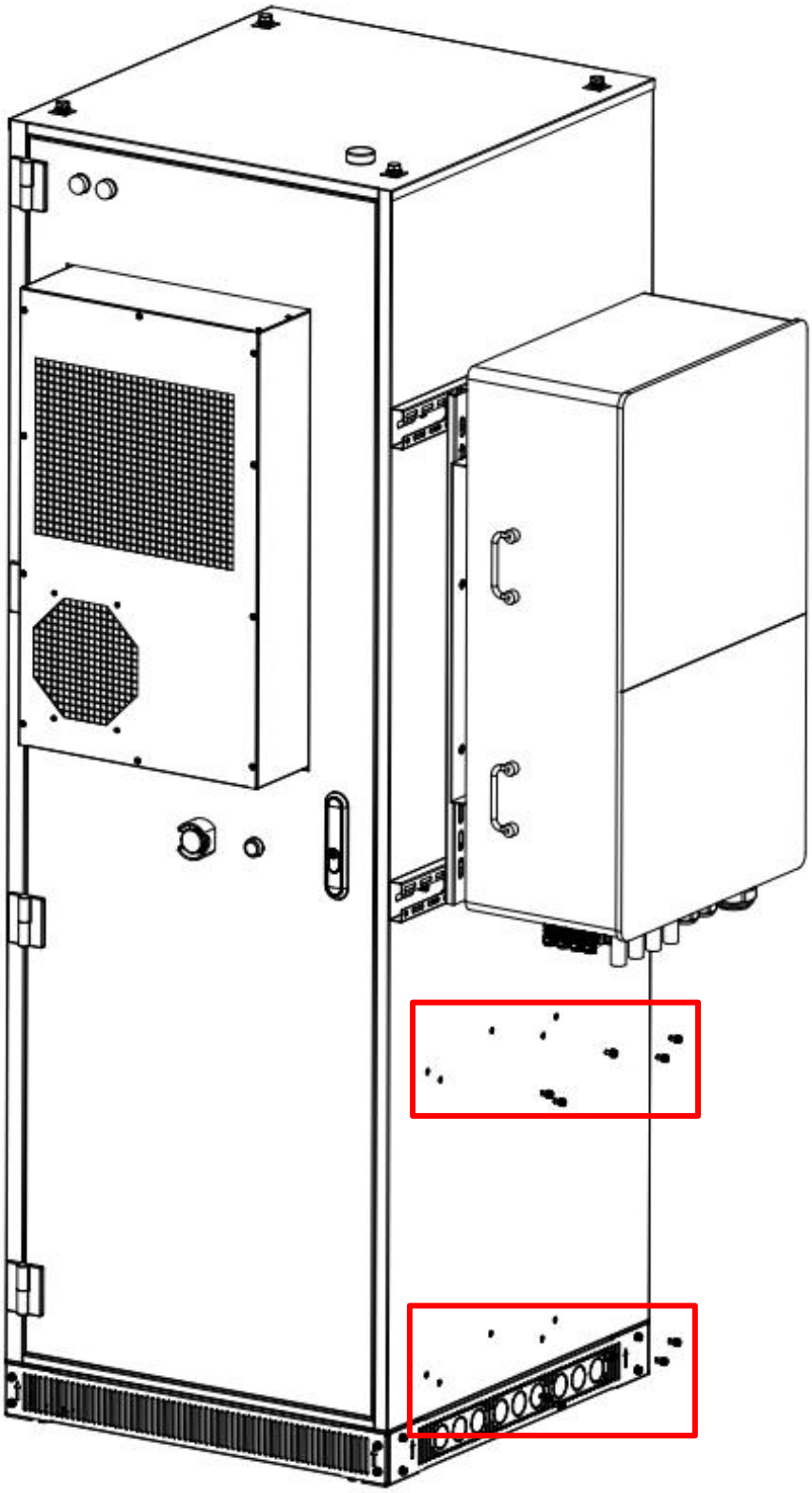

Figure 5.3.7.3 Remove the fastening screws from the cabinet body.

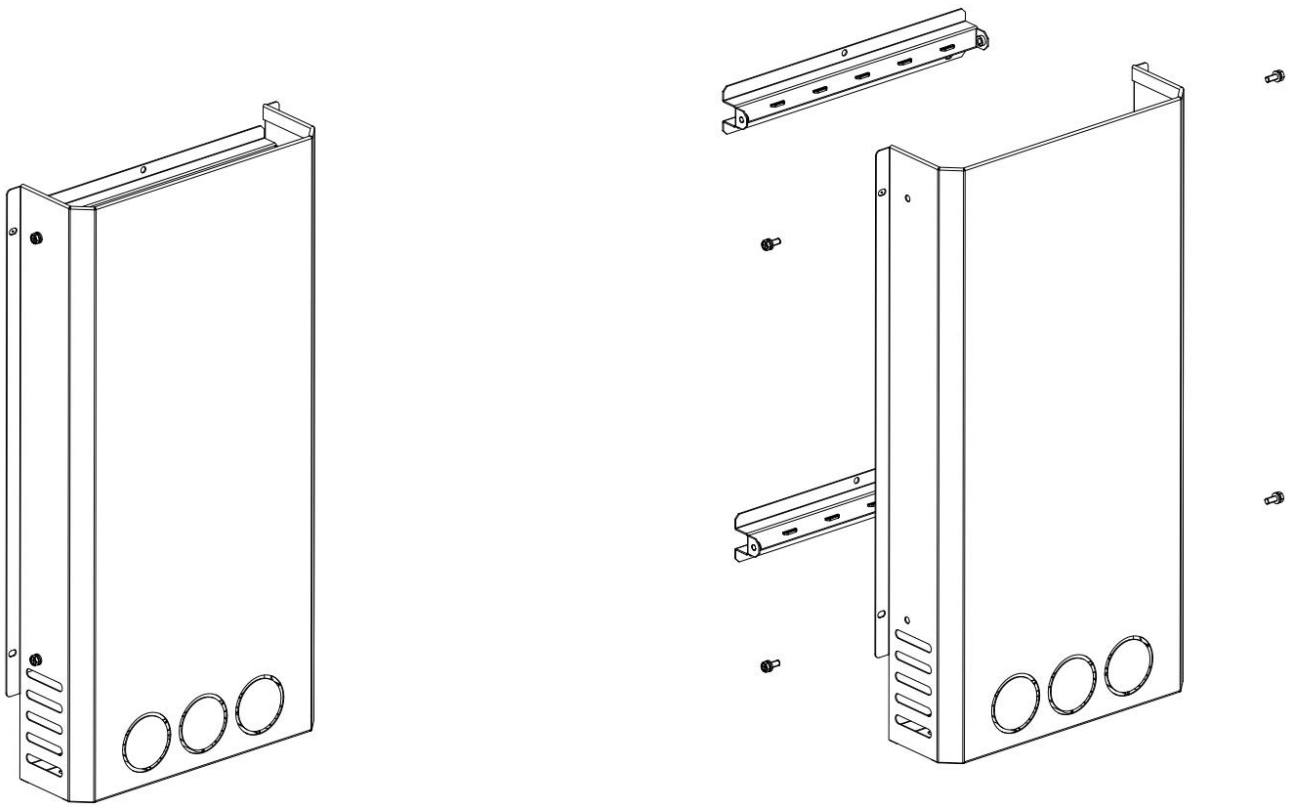

Figure 5.3.7.4 Removing the cable tie board from the cover plate

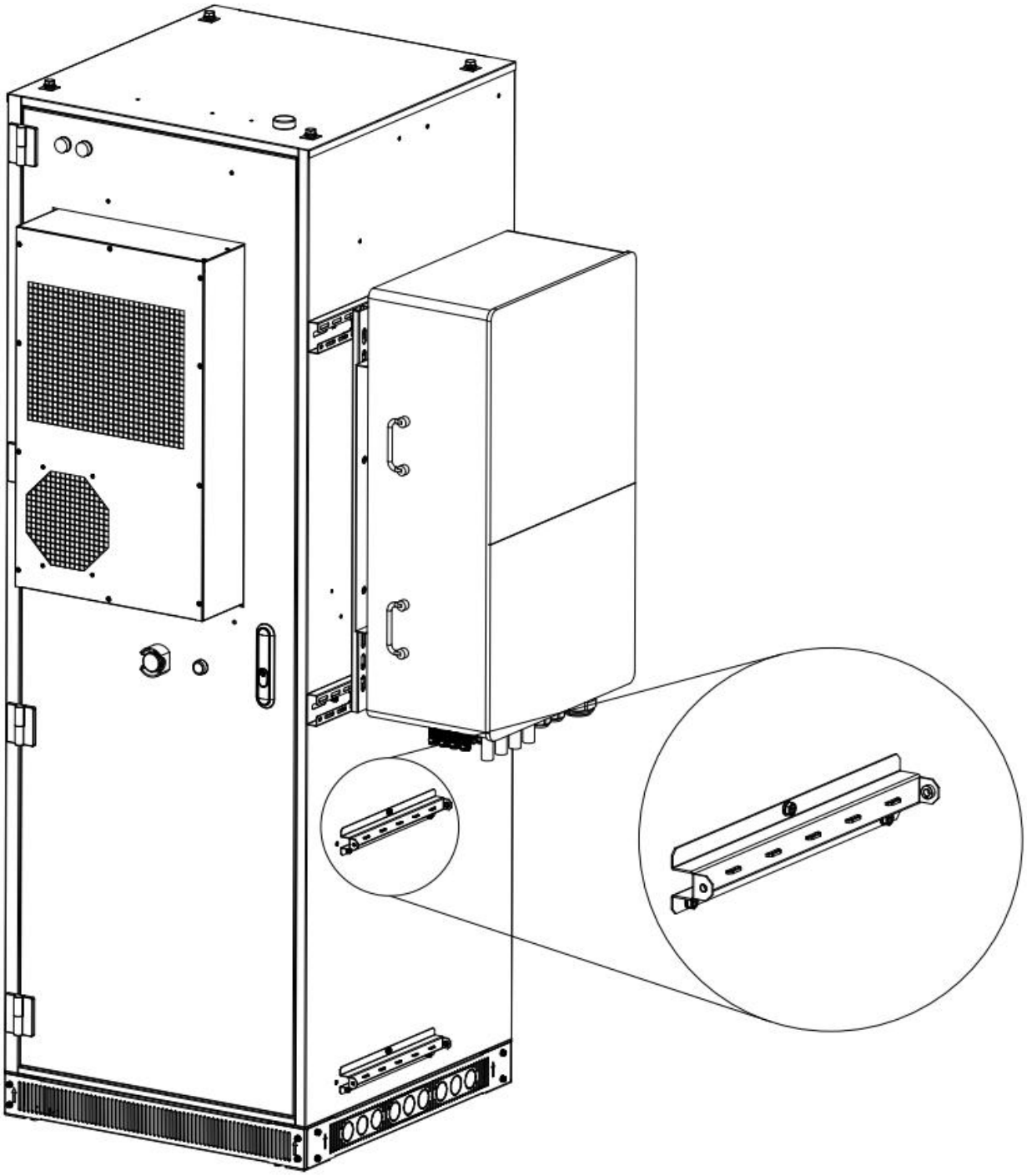

Figure 5.3.7.5 Mounting the removed cable management panel on the cabinet

After all cables are connected, route the internal cabinet cables through the cable access holes at the bottom of the cabinet. Secure them to the cable management plate before connecting to the PCS. Once wiring is complete, install the cable cover plate onto the cabinet (Figure 5.3.7.6).

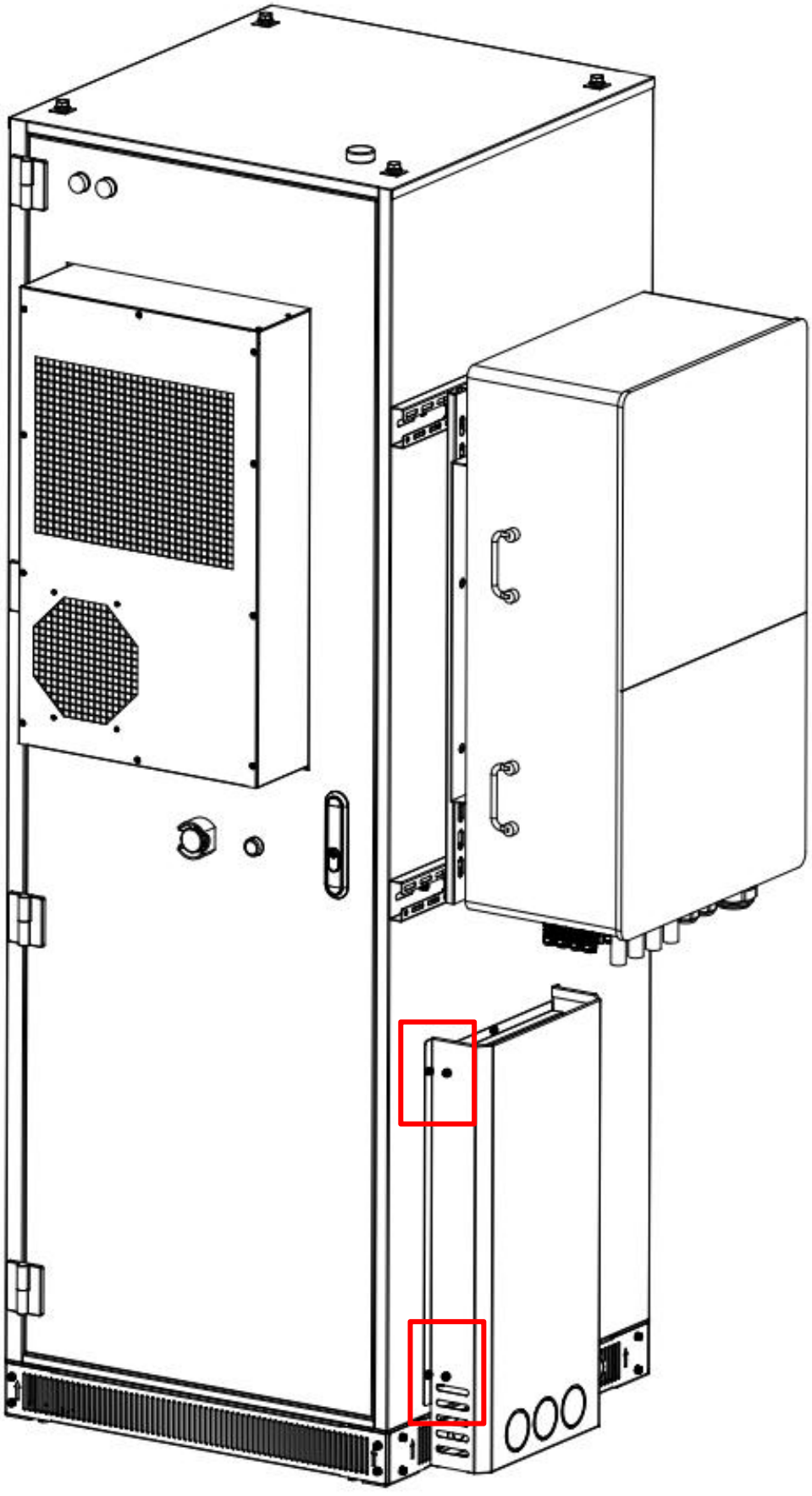

Figure 5.3.7.6 Installing the cover plate

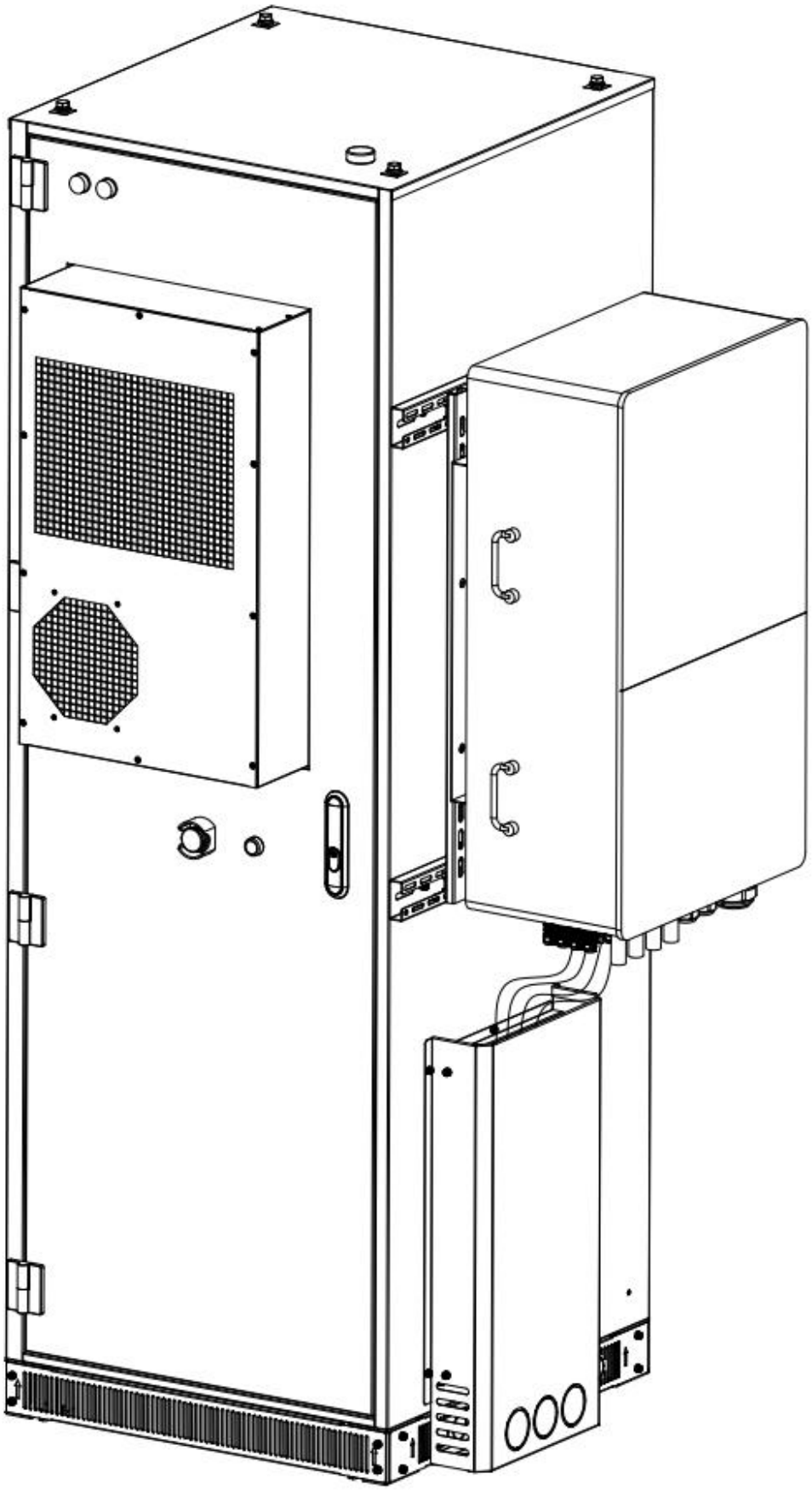

Figure 5.3.7.7 Schematic Diagram of the Installed Effect

5.3.8 Parallel Wiring Connection (If Required)

Connect the parallel power wiring harness (Figure 5.3.8.1, Figure 5.3.8.2).

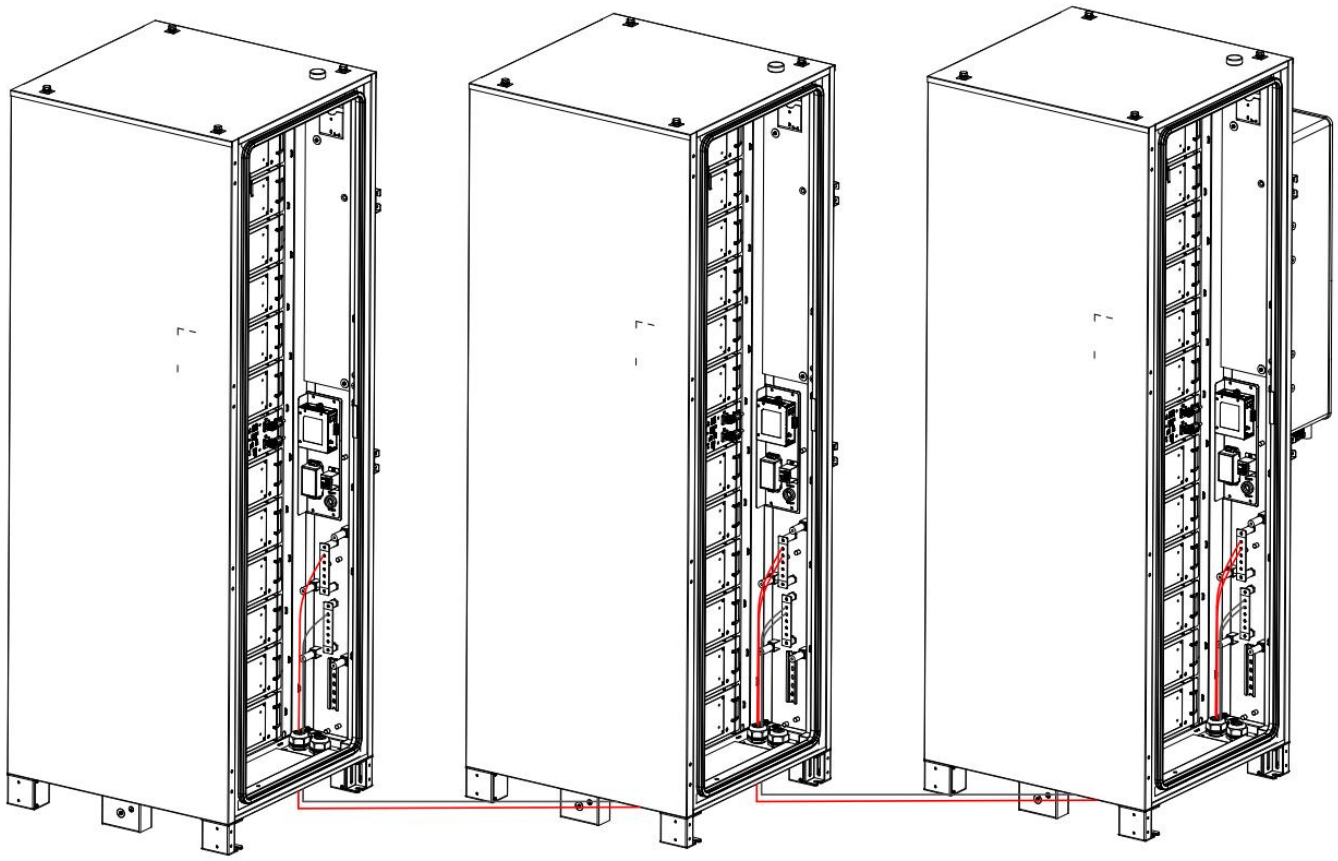

Figure 5.3.8.1 Schematic diagram of power wiring for multiple parallel units

Note: When 6 or fewer battery cabinets are connected in parallel (DC side expansion), a combiner device is not required. If AC side power expansion is required, a DC combiner device should be used when parallling (each cabinet should be connected to the combiner device separately with accessory cables).

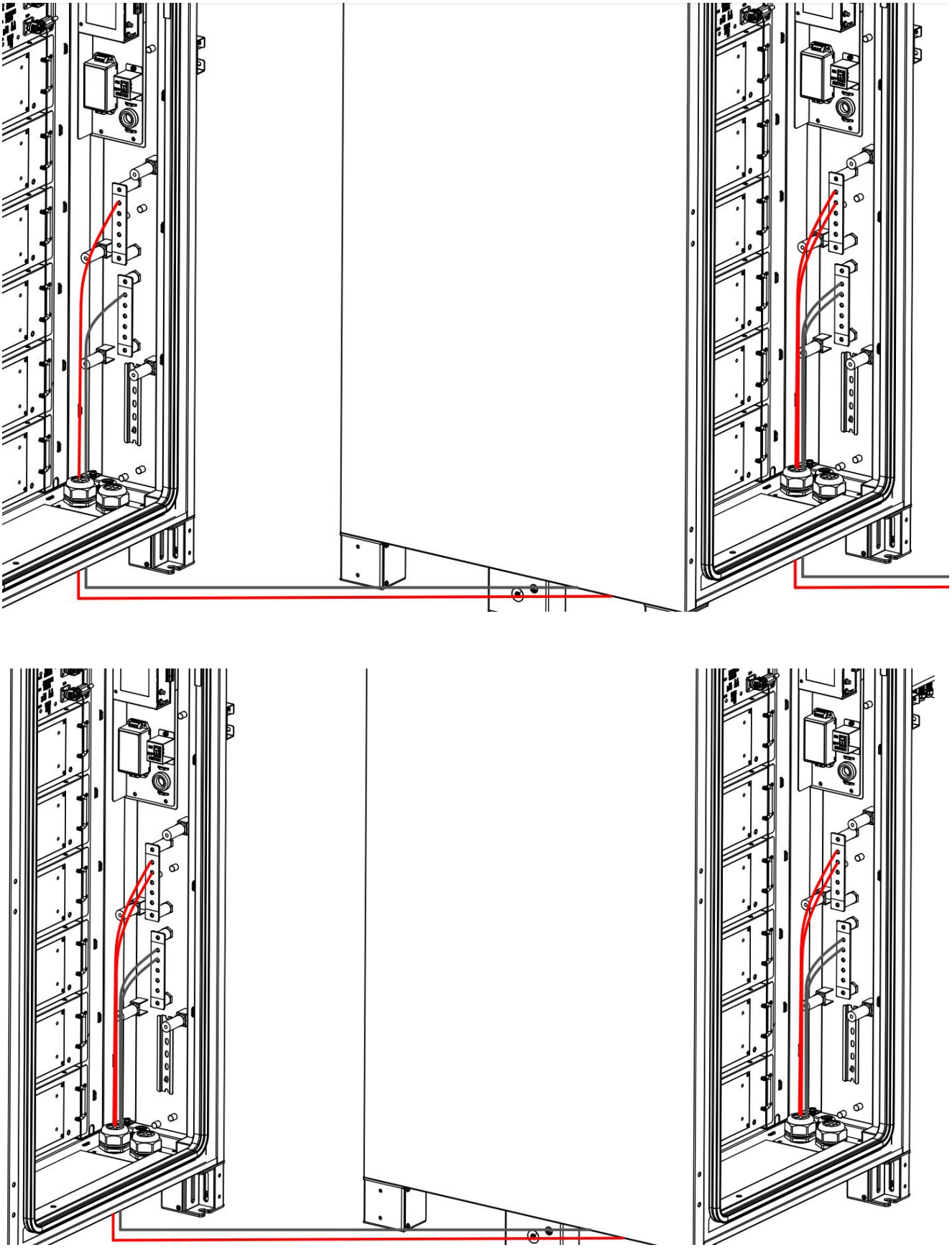

Figure 5.3.8.2 Partial magnification diagram of power wiring for multiple parallel units

2. Connect the Parallel Communication Cable

(1) Remove the terminating resistor from the COM1 port of the battery cabinet's control box (the primary function of the terminating resistor is to ensure stable communication).

The COM1 port of the outdoor cabinet's control box is factory-installed with a terminating resistor. When using multiple cabinets, only the first or last cabinet needs to retain the terminating resistor.

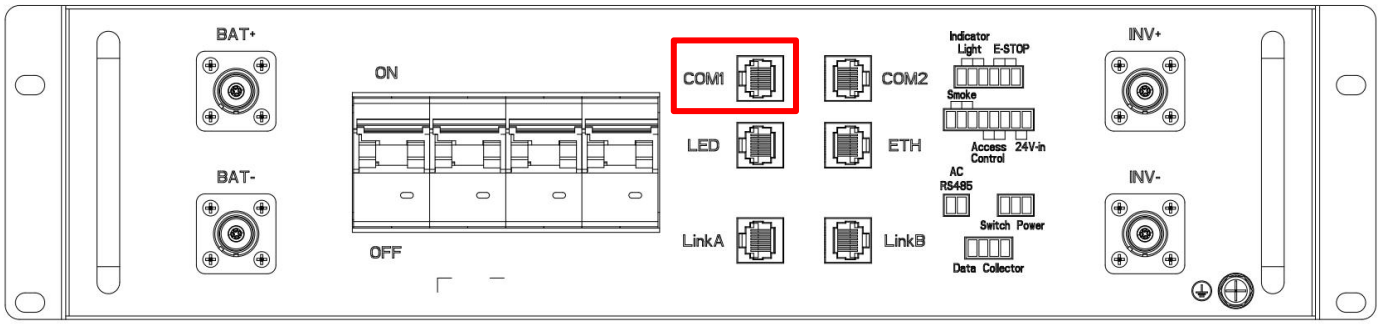

Figure 5.3.8.3 When connecting parallel communication lines, only one control box is required with a terminal resistor on the COM1 port.

(2) When connecting communication cables for parallel operation, connect the COM2 port of the first device to the COM1 port of the second device. Then connect the COM2 port of the second device to the COM1 port of the third device, and so on. Finally, connect the remaining COM2 port of the last device to the PCS externally (Figure 5.3.8.4 、Figure 5.3.8.5).

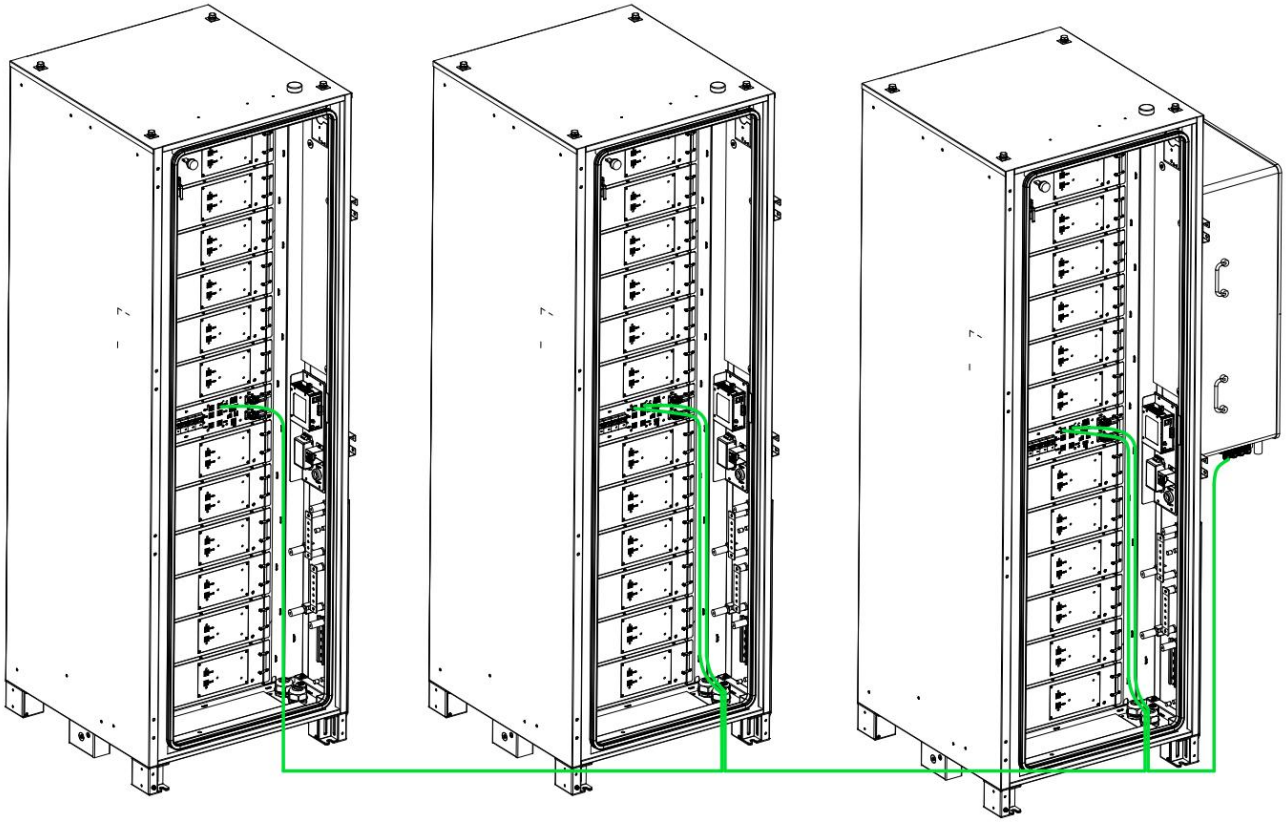

Figure 5.3.8.4 Schematic diagram of parallel communication wiring

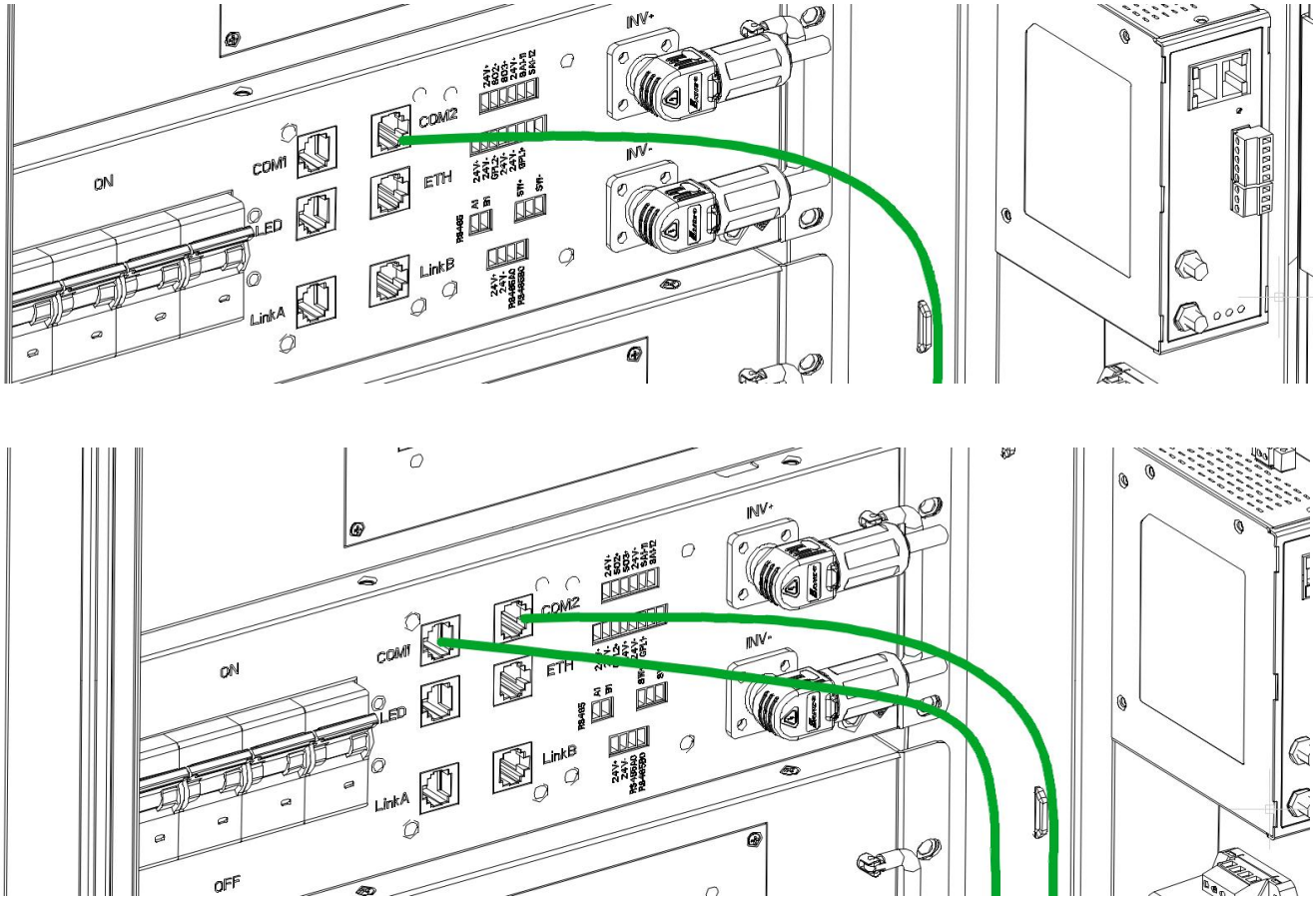

Figure 5.3.8.5 Partial Enlarged Diagram of Parallel Machine Communication Wiring

5.3.9 Electrical Inspection

To connect the local emergency stop switch to an external emergency stop control system for remote emergency stop functionality of the battery system, follow these steps:

The external emergency stop wiring port is concealed beneath the protective cover plate on the cabinet's inner wall. Remove this cover plate before installation (see Figure 5.3.5.1 for details).
If connecting an external normally closed (NC) emergency stop switch to the battery system, follow these wiring steps. If connecting an external normally open (NO) emergency stop switch, skip Step 1 and proceed directly to Step 2.

Step 1: Loosen the screw at terminal 1 (NC) (wire harness label KM4_NC_1) and connect it to terminal 3 (NO). Loosen the screw at terminal 4 (NO) (wire harness label KM4_NO_4) and connect it to terminal 2 (NC).

Step 2: Prepare two external emergency stop wiring harnesses. Recommended specification: 14 AWG, 2mm². Strip one end of each harness and install spade terminals. Connect these terminals to the external emergency stop switch's NO/NC contacts (terminal locations are for reference only; adjust based on actual conditions). Route both external emergency stop wires through the cabinet's bottom cable entry holes. It is recommended to exit the external emergency stop wires through the center cable entry hole. Adjust the wire extension length. Strip one wire and install a tubular pre-insulated terminal, connecting it to terminal EPO. Strip the other wire and install a spade terminal, connecting it to relay coil 7 (Coil). Then tighten all relay screws (as shown in Figure 5.3.9.1、Figure 5.3.9.2).

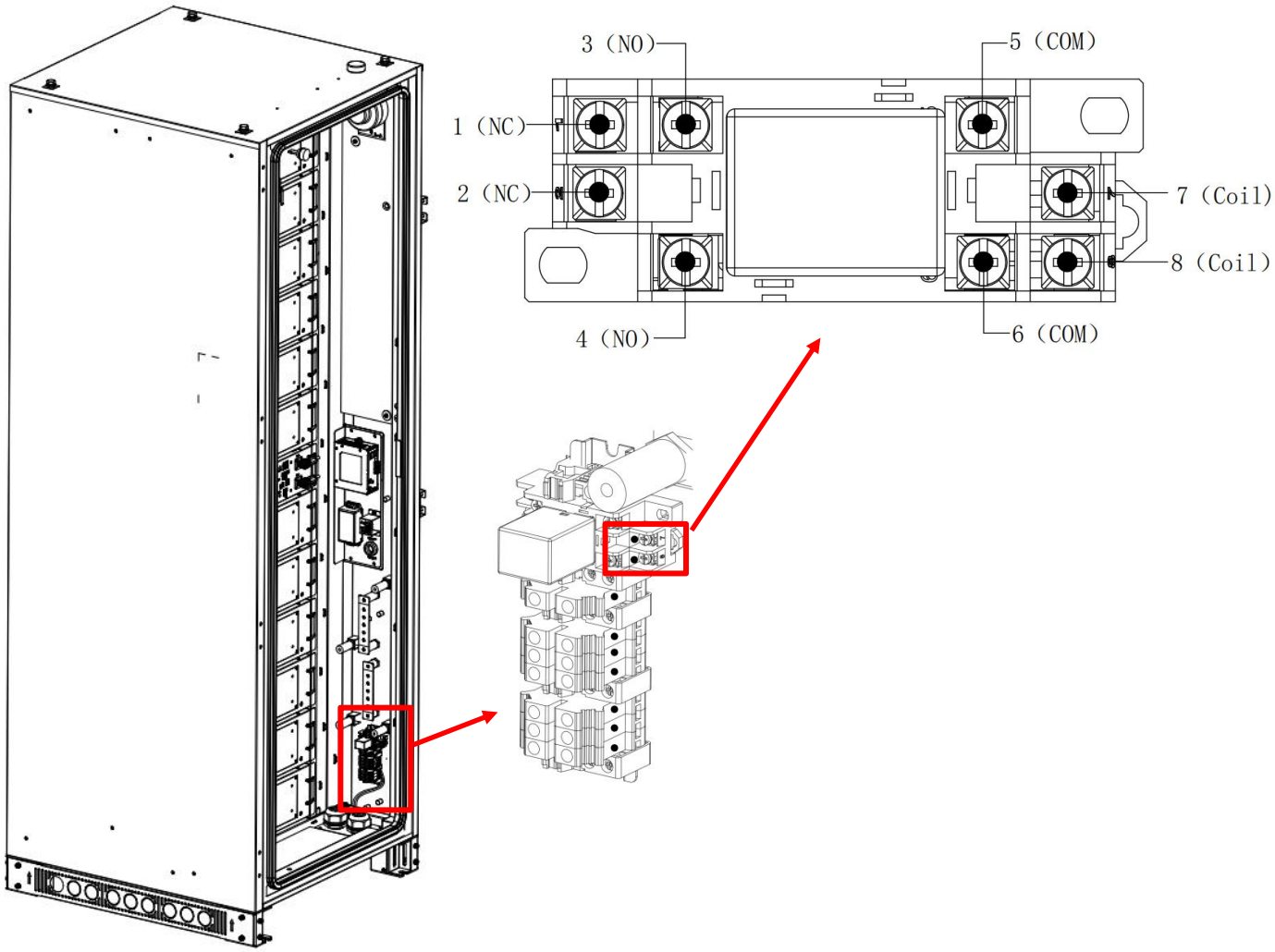

Figure 5.3.9.1 Schematic Diagram of Relay Terminal Connection

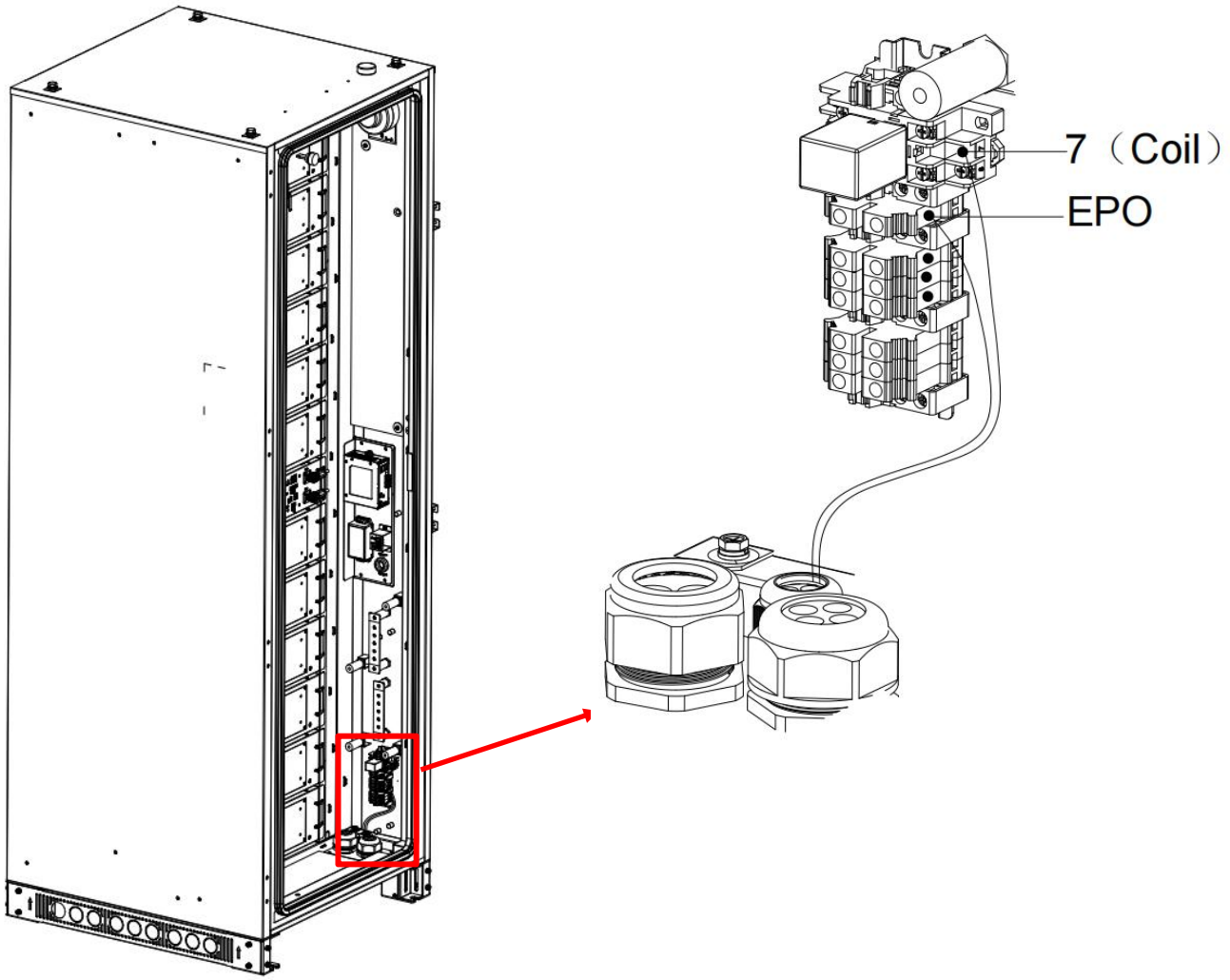

Figure 5.3.9.2 Diagram of the external wiring for the emergency stop function

5.4 Installation Inspection

5.4.1 Electrical Inspection

(1) Ground wire connection is complete. Connection is with tight and secure, with no leakage, or wrong connection.

(2) Power line connection is complete. Connect firmly and securely, without polarity reversal, leakage, wrong port and other phenomena.

(3) The communication line is connected correctly. Connection is tight and reliable, no leakage, wrong connection.

(4) The cables meet the principle of separation of strong and weak power, and the alignment is

straight and smooth, without crossing.

(5) All cables are not damaged or cracked, reasonably distributed, with appropriate margins at the turns.

(6) Check the value of grounding resistance ($\leqslant 0.1\Omega$) and make sure that the ground wire is well connected to the ground network.

5.4.2 Structural Inspection

(1) The equipment is well installed and free from breakage, rust and paint loss. If so, please refill the paint in time.

(2) Equipment label is clearly visible. If it is broken, please replace it in time.

(3) The equipment is firmly and stably installed, and the surrounding space meets the requirements.

(4) The equipment surrounding is clean and tidy, and there are no construction leftovers inside the equipment.

(5) The protective cover and baffle plate removed during wiring have been re-installed, and there is no missing installation.

VI. Equipment Operation

6.1 Indicator Light Introduction

NO.	Red Light（ALM）	Green Light (RUN)	Note
1	OFF	Flickering（1s/time）	Initialization state, starting state, stopped state
2	OFF	Always on	Operating state
3	Always on	OFF	Entire stack of fault state
4	Flickering（1s/time）	OFF	Single-cluster failure state

6.2 Operation Guidance

6.2.1 Pre-operation Inspection

1) Before proceeding to the next step of powering up the equipment, please read carefully "II. Safety Statement" of this manual and make a detailed inspection.

2) When operating or maintaining the internal metal parts of the equipment, the voltage to the enclosure (protective ground) must be checked with a high-voltage tester or other instrument to prevent electric shock.

After the installation of the equipment is completed, you need to check the following contents carefully and item by item before applying the power:

1. Please read "II. Safety Statement" carefully.
2. Confirm that the equipment is not damaged, scratches and other signs.
3. To confirm that the equipment cabinet, and rack tops are without leaving foreign objects.
4. Confirm that there is enough space around the equipment for maintenance and operation.
5. To confirm that there no explosive, flammable materials around the equipment.
6. Confirm that the system input switch in the field is disconnected, and all the power wiring is correct, all the communication line cable connections are correct.
7. Confirm that the equipment has been well grounded.
8. Confirm that the equipment has been set up around the isolation zone and warning signs to prevent others from misuse or closing.

6.2.2 Power-up Procedure

Step 1：Close the isolating switch between the externally provided PCS and the battery cabinet.

Step 2: Open the front door and set the control box circuit breaker to the ON position (Figure 6.2.2.1).

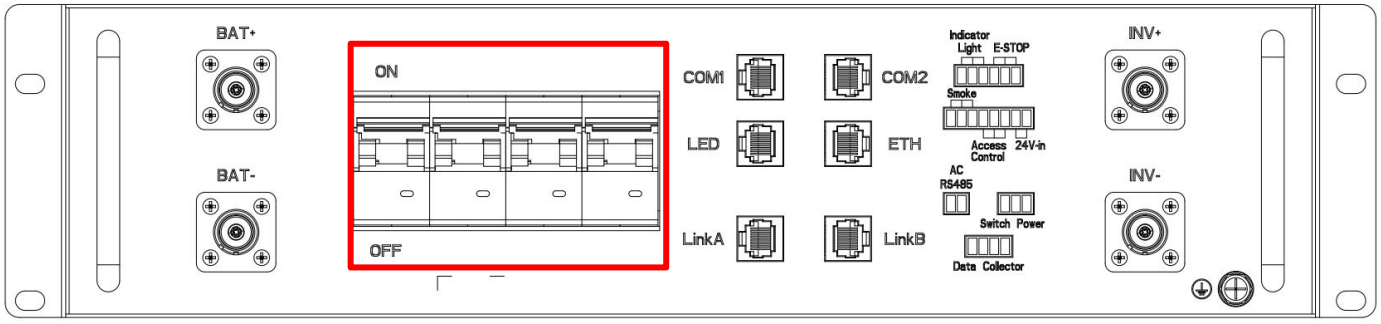

Figure 6.2.2.1 Opening the Air Circuit Breaker

Step 3: Press the POWER button on the front door for 3 seconds. The green operation indicator will flash steadily once per second until the battery completes startup (Figure 6.2.2.2).

Note: If the AC/DC power supply module's power control switch (see Figure 3.4.3, item 7) is already activated at this point, pressing the POWER button is unnecessary. Otherwise, the battery will enter sleep mode, need to press and hold the power button for 3 seconds again or restart to exit hibernation. Refer to Section 6.2.3 for detailed power-off procedures.

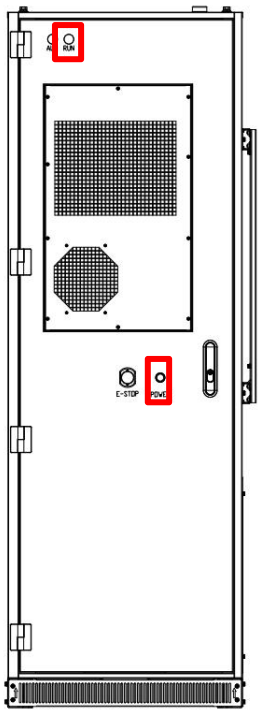

Figure 6.2.2.2 Press the POWER button on the cabinet door and observe whether the RUN indicator

light in the upper left corner of the cabinet illuminates.

Step 4: Once the green operational indicator light on the cabinet door remains steadily lit, press the inverter's ON/OFF switch. The inverter's LCD screen will illuminate, completing the inverter startup. Then, set the inverter's DC switch to “ON” (refer to the inverter manufacturer's manual for specific startup procedures on the inverter side).

6.2.3 Turn off the Power

Before powering down the battery system, First, set the inverter’s DC switch to “OFF” (for specific shutdown procedures on the inverter side, refer to the manufacturer’s instructions).The power-off procedure described here involves only disconnecting the electrical power; it does not involve removing the cables.

After confirming the inverter is disconnected, proceed with the following steps:

Step 1: Ensure the power control switch for the AC/DC power supply module in the battery cabinet is turned off.

Step 2: Press the POWER button on the front door for 3 seconds. When the green indicator light turns off, set the control box circuit breaker to the OFF position to shut down the system.

Step 3: Turn off the external isolating switch.

6.2.4 Emergency Shutdown

In case of an emergency, pressing the emergency stop button on the rack will immediately cut off the primary circuit inside the product and stop the charging and discharging path.

VII. Maintenance Guidance

7.1 Maintenance Precautions

1) Before maintenance, it is necessary to use high-voltage testers or other instruments to test the metal parts that need to be touched or may be touched to avoid electric shock.

2) During maintenance, please pay attention to the warning labels inside the equipment to prevent personal injury caused by high-temperature, overweight and other components.

3) Maintenance must be carried out when the system is shut down and not energized, and the following steps should be followed:
Shut down the equipment.
② Disconnect all external power sources.
③ Confirm that the pre-stage switch has been disconnected and the grounding knife switch is properly connected.
After maintenance, all screws need to be tightened to the required torque.

4) The model of the new device replaced must be consistent with the original one. If you have any questions, please contact Sunwoda.

5) Daily inspections of the equipment can be carried out by personnel who have received relevant training, and the inspection and replacement of its components should be operated by authorized professionals.

6) The components behind the protective cover plate that can only be opened with tools are not accessible to users. Only qualified maintenance personnel are allowed to open such protective cover plates.

7.2 Maintenance Content

Due to the influence of factors such as humidity, temperature, dust and vibration in the operating environment, the internal components of energy storage systems that have been in use for a long time may experience varying degrees of aging or performance degradation. After the equipment is put into use, please be sure to inspect it regularly. The inspection items are as follows:

Inspect the Component	Inspection Content	Inspection Cycle
Cabinet Note: For any operation that requires touching the cabinet, please make sure to power off the cabinet and wait for 15 minutes before proceeding	① Check whether the operating noise of the cabinet is too loud or there are any abnormal sounds	Once three month
	② Check whether the outer wall of the cabinet has abnormal temperature	Once three month
	③ Check the surrounding environment of the cabinet for any accumulated water, dirt, heat sources or other items, and remove them in time	Once a month
	④ Check whether there is any dust accumulation at the air inlet and outlet of the cabinet. Is there too much dust or object covering the top of the cabinet	Once six month
	⑤ Check whether the cabinet shell shows signs of rust, oxidation, damage, paint peeling, etc	Once a year
Wiring harnesses and terminal blocks Note: Please be sure to power off the system and wait for 15 minutes before conducting any relevant inspection operations	① Check whether the power, communication and ground wire connections are loose	Once a year
	② Check whether the insulating skin of the power, communication and ground wires is damaged	Once a year
	③ Check whether the insulating winding tape of the power line is damaged	Once a year
	④ Check whether the terminal blocks or copper bars are loose or have rust or oxidation	Once a year
Air conditioner	① Check if there is any dust accumulation at the air conditioning vents and clean it in time (replace the dust-proof cotton if necessary).	Once a year
	② Check if there is any abnormal sound when the air conditioner is running	Once six month
Fire protection devices such as smoke sensors	① Regularly check the sensitivity of the smoke sensor by using controllable smoke	Once a year

VIII. Fault Handling

NO.	Fault Description	Possible Reason	Solution
1	POWER Button Unresponsive	Button damaged or wiring faulty	Replace button, check wiring harness continuity, or contact supplier
2	Short Discharge Time	Battery insufficient charge	Keep product charging continuously for over 2 hours to fully charge the battery energy storage system
		Product overloaded	Check load status and remove non-essential loads.
		Battery aging, reduced capacity	Replace the battery. Contact the supplier for batteries and components
3	Unable to Charge or Discharge	Internal malfunction	Contact the supplier.
		Battery reports charging or discharging Protection fault	Refer to the battery indicator function status table to identify the corresponding fault cause
		Battery discharged to SOC protection threshold	Modify the lower limit SOC value on the PCS side.Charge the battery to restore it.
		Battery overheating	Allow to cool at room temperature for over 3 hours.
4	Battery communication error	Communication disconnection	Inspect whether the battery CAN communication connection is secure.
5	Red light fault indication	Equipment malfunction	Refer to the PCS fault code table based on the fault information (function code) displayed on the PCS side to identify the corresponding cause.
6	Inverter fails to start	Battery voltage too low or PV offline	Charge the battery after starting the inverter via the grid.
7	Battery cannot charge via grid	Inverter configuration issue	Refer to the inverter user manual for details
		Battery fault protection	Consult the indicator light function status table based on the displayed fault information to identify the corresponding cause.
		Grid abnormality	Check if the grid voltage is normal.

Note: If the fault type encountered is not covered in the table above, please contact Sunwoda service personnel.

Sunwoda Energy Technology Co., Ltd
Sunwoda Industrial Park, No.18 Tangjia South Road, Guangming New District, Shenzhen, China
www.sunwodaenergy.com

Version: 20260424-V1 SUNWODA All rights reserved. Subject to change without notice.